eClassroom

INTERNATIONAL A LEVEL MATHEMATICS • PURE 4 (WMA14)

Pure 4 Practice Paper 1

Worked Solutions

AIMING FOR B

Written in the style of the Pearson Edexcel International Advanced Level paper (WMA14/01) • 75 marks

Every question solved in full on the paper itself, the way your teacher would write it out

How to read these solutions. Each page is the real question page, with a full answer written on the answer lines.

Red pen

M1 A1

boxed

the working a full-marks answer shows, with a short note on why each step is taken

the mark earned on that line: M = method, A = accuracy, B = independent mark

the final answer to each part

Sit the paper first. These solutions are most useful after you have tried every question yourself under timed conditions. Mark your paper with the mark scheme, then use this booklet to see exactly how each lost mark could have been earned.

Q	Topic	Marks	Page
1	Partial fractions and binomial series	8	2
2	Proof by contradiction	7	3
3	A parametric curve that crosses itself	7	4
4	Implicit differentiation	7	6
5	Integration by parts and a volume	8	7
6	Connected rates of change	7	8
7	A separable differential equation	8	9
8	Integration by substitution and area	7	10
9	Vector equations of lines	8	11
10	A rumour model	8	12

Question paper & mark scheme | Exam questions by topic | More practice papers

★★★★★

Join students already acing their exams.

Book your FREE lesson at www.eclassroom.org.uk

1. In this question you must show all stages of your working.

Solutions relying on calculator technology are not acceptable.

$$f(x) = \frac{x+8}{(1-x)(2+x)^2}$$

(a) Express $f(x)$ in partial fractions.

(4)

(b) Hence find the series expansion of $f(x)$, in ascending powers of x, up to and including the term in x^2. Give each coefficient as a simplified fraction.

(3)

(c) State the range of values of x for which your expansion is valid.

(1)

(a) $\frac{x+8}{(1-x)(2+x)^2} \equiv \frac{A}{1-x} + \frac{B}{2+x} + \frac{C}{(2+x)^2}$

$x + 8 \equiv A(2+x)^2 + B(1-x)(2+x) + C(1-x)$ M1

$x = 1$: $9 = 9A \Rightarrow A = 1$ B1

$x = -2$: $6 = 3C \Rightarrow C = 2$. Compare x^2: $0 = A - B \Rightarrow B = 1$ M1

$f(x) = 1/(1-x) + 1/(2+x) + 2/(2+x)^2$ A1

(b) $(1-x)^{-1} = 1 + x + x^2 + \ldots$

$(2+x)^{-1} = \frac{1}{2}(1+\frac{x}{2})^{-1} = \frac{1}{2}(1 - \frac{x}{2} + \frac{x^2}{4}) = \frac{1}{2} - \frac{1}{4}x + \frac{1}{8}x^2$ M1

$2(2+x)^{-2} = 2 \times \frac{1}{4}(1+\frac{x}{2})^{-2} = \frac{1}{2}(1 - x + \frac{3}{4}x^2) = \frac{1}{2} - \frac{1}{2}x + \frac{3}{8}x^2$ M1

Add: $(1 + \frac{1}{2} + \frac{1}{2}) + (1 - \frac{1}{4} - \frac{1}{2})x + (1 + \frac{1}{8} + \frac{3}{8})x^2$ $2 + \frac{1}{4}x + (3/2)x^2$ A1

(c) $(2+x)^{-1}$ needs $|x| < 2$, but $(1-x)^{-1}$ needs $|x| < 1$, so all three need $|x| < 1$ B1

(Total for Question 1 is 8 marks)

DO NOT WRITE IN THIS AREA

2. **(a)** Prove by contradiction that $\log_2 3$ is irrational.

(4)

(b) Prove by contradiction that there are no integers a and b such that

$$6a + 15b = 2$$

(3)

(a) Assume $\log_2 3$ is rational: $\log_2 3 = \frac{p}{q}$, with p, q positive integers (as $\log_2 3 > 0$) B1

$2^{p/q} = 3 \Rightarrow 2^p = 3^q$ M1

$p \geqslant 1$, so 2^p is even; 3^q is a product of odd numbers, so it is odd A1

An even number cannot equal an odd number: contradiction. So $\log_2 3$ is irrational A1

(b) Assume there are integers a and b such that $6a + 15b = 2$ B1

$6a + 15b = 3(2a + 5b) = 2 \Rightarrow 2a + 5b = \frac{2}{3}$ M1

$2a + 5b$ is an integer but $\frac{2}{3}$ is not: contradiction. No such integers exist A1

(Total for Question 2 is 7 marks)

DO NOT WRITE IN THIS AREA

★★★★★ Join students already acing their exams.
Book your FREE lesson at www.eclassroom.org.uk

3.

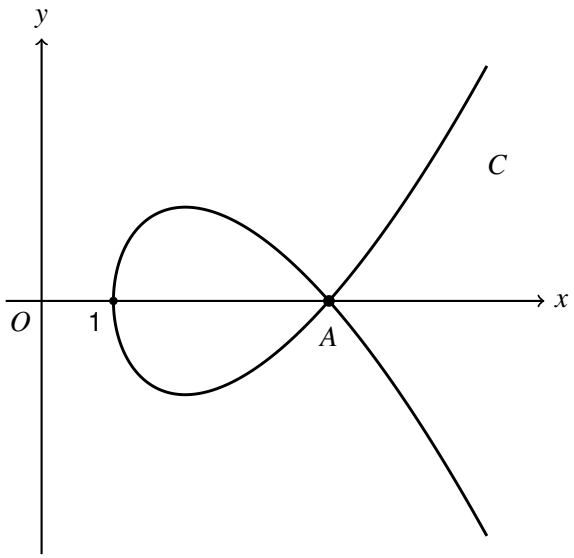

Figure 1

Figure 1 shows the curve C with parametric equations

$$x = t^2 + 1, \qquad y = t^3 - 3t \qquad t \in \mathbb{R}$$

The curve crosses itself at the point $A(4, 0)$.

(a) Show that C passes through A for two different values of t.

(2)

(b) Find the gradient of each of the two tangents to C at A.

(3)

(c) Show that a Cartesian equation of C is

$$y^2 = (x-1)(x-4)^2$$

(2)

(a) At A, $x = 4$: $t^2 + 1 = 4 \Rightarrow t = \pm\sqrt{3}$ M1

$t = \sqrt{3}$: $y = 3\sqrt{3} - 3\sqrt{3} = 0$; $t = -\sqrt{3}$: $y = -3\sqrt{3} + 3\sqrt{3} = 0$. Two values of t ✓ A1

(b) $\frac{dy}{dx} = \frac{dy/dt}{dx/dt} = \frac{3t^2 - 3}{2t}$ M1

$t = \sqrt{3}$: $6 \div 2\sqrt{3} = 3 \div \sqrt{3} = \sqrt{3}$; $t = -\sqrt{3}$: $6 \div (-2\sqrt{3}) = -\sqrt{3}$ M1

gradients $\sqrt{3}$ and $-\sqrt{3}$ A1

(c) $y = t(t^2 - 3)$, so $y^2 = t^2(t^2 - 3)^2$, and $t^2 = x - 1$ M1

$y^2 = (x - 1)(x - 1 - 3)^2 = (x - 1)(x - 4)^2$ ✓ A1

DO NOT WRITE IN THIS AREA
DO NOT WRITE IN THIS AREA
DO NOT WRITE IN THIS AREA
DO NOT WRITE IN THIS AREA
DO NOT WRITE IN THIS AREA
DO NOT WRITE IN THIS AREA

Question 3 continued

DO NOT WRITE IN THIS AREA
DO NOT WRITE IN THIS AREA
DO NOT WRITE IN THIS AREA
DO NOT WRITE IN THIS AREA
DO NOT WRITE IN THIS AREA
DO NOT WRITE IN THIS AREA

(Total for Question 3 is 7 marks)

★★★★★
Join students already acing their exams.
Book your FREE lesson at www.eclassroom.org.uk

4. The curve C has equation

$$x^2 + xy + y^2 = 12$$

(a) Find $\frac{dy}{dx}$ in terms of x and y.

(4)

(b) Find the coordinates of the points on C at which the tangent to C is parallel to the x-axis.

(3)

(a) Differentiate each term with respect to x: $2x + (y + x\frac{dy}{dx}) + 2y\frac{dy}{dx} = 0$ M1 M1

$2x + y + (x + 2y)\frac{dy}{dx} = 0$ A1

$dy/dx = -(2x + y)/(x + 2y)$ A1

(b) Parallel to the x-axis: $\frac{dy}{dx} = 0 \Rightarrow 2x + y = 0 \Rightarrow y = -2x$ M1

$x^2 + x(-2x) + (-2x)^2 = 12 \Rightarrow 3x^2 = 12 \Rightarrow x = \pm 2$ M1

$x = 2$: $y = -4$; $x = -2$: $y = 4$ $(2, -4)$ and $(-2, 4)$ A1

(Total for Question 4 is 7 marks)

DO NOT WRITE IN THIS AREA

★★★★★ Join students already acing their exams.
Book your FREE lesson at www.eclassroom.org.uk

5. In this question you must show all stages of your working.

Solutions relying on calculator technology are not acceptable.

(a) Find $\int x\mathrm{e}^{-x}\,\mathrm{d}x$

(3)

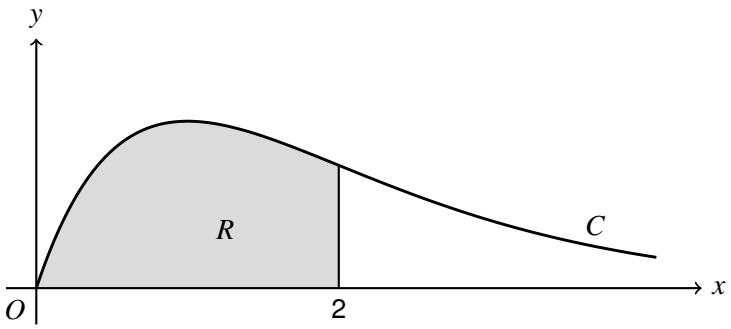

Figure 2

Figure 2 shows part of the curve C with equation $y = x\mathrm{e}^{-x}$, $x \geqslant 0$

The region R, shown shaded in Figure 2, is bounded by C, the x-axis and the line $x = 2$

The region R is rotated through 2π radians about the x-axis to form a solid of revolution.

(b) Use integration to show that the volume of the solid is

$$\frac{\pi}{4}\left(1 - 13\mathrm{e}^{-4}\right)$$

(5)

(a) $u = x$, $\frac{dv}{dx} = e^{-x}$; $\frac{du}{dx} = 1$, $v = -e^{-x}$

$\int xe^{-x}\,dx = -xe^{-x} - \int(-e^{-x})\,dx = -xe^{-x} + \int e^{-x}\,dx$ M1 A1

$-xe^{-x} - e^{-x} + c$ A1

(b) $V = \pi\int y^2\,dx = \pi\int x^2e^{-2x}\,dx$, from $x = 0$ to $x = 2$ B1

$u = x^2$, $v = -\frac{1}{2}e^{-2x}$; $\int x^2e^{-2x}\,dx = -\frac{1}{2}x^2e^{-2x} + \int xe^{-2x}\,dx$ M1

$\int xe^{-2x}\,dx = -\frac{1}{2}xe^{-2x} + \int \frac{1}{2}e^{-2x}\,dx = -\frac{1}{2}xe^{-2x} - \frac{1}{4}e^{-2x}$ M1

So $\int x^2e^{-2x}\,dx = -e^{-2x}(\frac{1}{2}x^2 + \frac{1}{2}x + \frac{1}{4})$ A1

From 0 to 2: $-e^{-4}(2 + 1 + \frac{1}{4}) + \frac{1}{4} = \frac{1}{4} - (13/4)e^{-4} \Rightarrow V = \frac{\pi}{4}(1 - 13e^{-4})$ ✓ A1

(Total for Question 5 is 8 marks)

DO NOT WRITE IN THIS AREA

6.

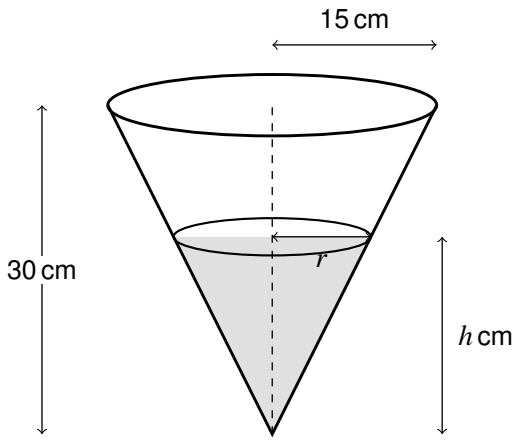

Figure 3

Figure 3 shows a funnel in the shape of a right circular cone, held with its vertex pointing down. The cone has height 30 cm and its top has radius 15 cm.

When the depth of water in the funnel is h cm, the surface of the water is a circle of radius r cm and the volume of water is V cm^3.

(a) Show that $V = \dfrac{\pi h^3}{12}$

(2)

Water drips out of the funnel at a constant rate of 3 cm^3 s^{-1}.

(b) Find, in terms of π, the rate at which the depth of the water is falling at the instant when $h = 6$

(3)

(c) Find, in terms of π, the rate at which the radius of the water surface is decreasing at this instant.

(2)

(a) Similar triangles: $\frac{r}{h} = \frac{15}{30} \Rightarrow r = \frac{h}{2}$ M1

$V = \frac{1}{3}\pi r^2 h = \frac{1}{3}\pi(\frac{h}{2})^2 h = \frac{\pi h^3}{12}$ ✓ A1

(b) $\frac{dV}{dh} = \frac{\pi h^2}{4}$, and $\frac{dV}{dt} = -3$ (the volume is decreasing) M1

$h = 6$: $\frac{dh}{dt} = \frac{dV}{dt} \div \frac{dV}{dh} = -3 \div \frac{36\pi}{4} = -3 \div 9\pi = -\frac{1}{3\pi}$ M1

depth falling at $1/(3\pi)$ cm per second A1

(c) $r = \frac{h}{2} \Rightarrow \frac{dr}{dt} = \frac{1}{2} \times \frac{dh}{dt} = -\frac{1}{6\pi}$ M1

radius decreasing at $1/(6\pi)$ cm per second A1

(Total for Question 6 is 7 marks)

DO NOT WRITE IN THIS AREA
DO NOT WRITE IN THIS AREA
DO NOT WRITE IN THIS AREA
DO NOT WRITE IN THIS AREA
DO NOT WRITE IN THIS AREA
DO NOT WRITE IN THIS AREA

★★★★★
Join students already acing their exams.
Book your FREE lesson at www.eclassroom.org.uk

7. In this question you must show all stages of your working.

Solutions relying on calculator technology are not acceptable.

(a) Find $\int x e^{2x} \, dx$

(3)

(b) Given that $y = -2$ when $x = 0$, solve the differential equation

$$\frac{dy}{dx} = x e^{2x}(y+3)^2$$

showing that the solution is

$$y = -3 + \frac{4}{3 + (1-2x)e^{2x}}$$

(5)

(a) $u = x$, $v = \frac{1}{2}e^{2x}$: $\int xe^{2x}\,dx = \frac{1}{2}xe^{2x} - \int \frac{1}{2}e^{2x}\,dx$ M1

$= \frac{1}{2}xe^{2x} - \frac{1}{4}e^{2x}$ A1

$\frac{1}{2}xe^{2x} - \frac{1}{4}e^{2x} + c$ A1

(b) Separate the variables: $\int (y+3)^{-2}\,dy = \int xe^{2x}\,dx$ M1

$-(y+3)^{-1} = \frac{1}{2}xe^{2x} - \frac{1}{4}e^{2x} + c$ B1

$x = 0, y = -2$: $-1 = 0 - \frac{1}{4} + c$ M1

$c = -\frac{3}{4}$ (find c now, before rearranging) A1

$1 \div (y+3) = \frac{3}{4} + \frac{1}{4}e^{2x} - \frac{1}{2}xe^{2x} = \frac{1}{4}(3 + (1-2x)e^{2x})$

$y + 3 = 4 \div (3 + (1-2x)e^{2x}) \Rightarrow y = -3 + 4 \div (3 + (1-2x)e^{2x})$ ✓ A1

(Total for Question 7 is 8 marks)

DO NOT WRITE IN THIS AREA

Join students already acing their exams.
Book your FREE lesson at www.eclassroom.org.uk

8. In this question you must show all stages of your working.

Solutions relying on calculator technology are not acceptable.

(a) Use the substitution $u = e^x + 1$ to show that

$$\int \frac{e^{2x}}{e^x + 1}\,dx = e^x - \ln\left(e^x + 1\right) + c$$

where c is an arbitrary constant.

(4)

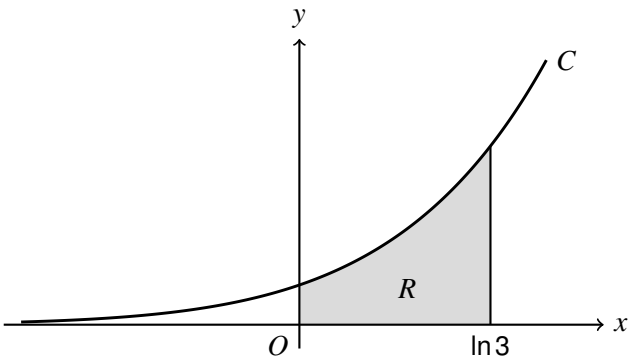

Figure 4

Figure 4 shows part of the curve C with equation $y = \dfrac{e^{2x}}{e^x + 1}$

The region R, shown shaded in Figure 4, is bounded by C, the coordinate axes and the line $x = \ln 3$

(b) Find the exact area of R, giving your answer in the form $a + \ln b$, where a and b are rational constants.

(3)

(a) $u = e^x + 1$: $du = e^x\,dx$, and $e^x = u - 1$ M1

$\int e^{2x}\,dx \div (e^x + 1) = \int e^x \times (e^x\,dx) \div (e^x + 1) = \int \frac{u-1}{u}\,du$ M1

$= \int \left(1 - \frac{1}{u}\right) du = u - \ln u$ A1

$= e^x + 1 - \ln(e^x + 1) + c = e^x - \ln(e^x + 1) + c$ (the 1 joins the constant) ✓ A1

(b) Area $= [e^x - \ln(e^x + 1)]$ from $x = 0$ to $x = \ln 3$ M1

$= (3 - \ln 4) - (1 - \ln 2)$ M1

$= 2 - 2\ln 2 + \ln 2$ Area $= 2 - \ln 2$ A1

(Total for Question 8 is 7 marks)

DO NOT WRITE IN THIS AREA
DO NOT WRITE IN THIS AREA
DO NOT WRITE IN THIS AREA
DO NOT WRITE IN THIS AREA
DO NOT WRITE IN THIS AREA
DO NOT WRITE IN THIS AREA

9. The lines l_1 and l_2 have equations

$$l_1 : \mathbf{r} = \begin{pmatrix} 1 \\ 2 \\ -1 \end{pmatrix} + \lambda \begin{pmatrix} 2 \\ -1 \\ 3 \end{pmatrix} \qquad l_2 : \mathbf{r} = \begin{pmatrix} 5 \\ 3 \\ -2 \end{pmatrix} + \mu \begin{pmatrix} 1 \\ 1 \\ -2 \end{pmatrix}$$

where λ and μ are scalar parameters.

(a) Show that l_1 and l_2 meet, and find the coordinates of their point of intersection P.

(4)

(b) Find the acute angle between l_1 and l_2, giving your answer in degrees to one decimal place.

(2)

The point $A(1, 2, -1)$ lies on l_1

The point B, where B is not P, lies on l_2 and is such that $AB = AP$

(c) Find the coordinates of B.

(2)

(a) Equate: $1 + 2\lambda = 5 + \mu$, $2 - \lambda = 3 + \mu$, $-1 + 3\lambda = -2 - 2\mu$ M1

Subtract the first two: $3\lambda - 1 = 2 \Rightarrow \lambda = 1$, then $\mu = 1 + 2 - 5 = -2$ M1

Third component: $-1 + 3(1) = 2$ and $-2 - 2(-2) = 2$ ✓ so the lines meet A1

$\lambda = 1$ in l_1: $P(3, 1, 2)$ A1

(b) $(2, -1, 3)\cdot(1, 1, -2) = 2 - 1 - 6 = -5$; $|d_1| = \sqrt{14}$, $|d_2| = \sqrt{6}$ M1

$\cos\theta = 5 \div (\sqrt{14} \times \sqrt{6}) = 0.5455\ldots$ (+5 for the acute angle) $\theta = 56.9°$ A1

(c) $AP = (2, -1, 3)$, so $AP^2 = 14$. On l_2: $B = (5 + \mu, 3 + \mu, -2 - 2\mu)$

$(4 + \mu)^2 + (1 + \mu)^2 + (-1 - 2\mu)^2 = 14 \Rightarrow 6\mu^2 + 14\mu + 4 = 0 \Rightarrow 3\mu^2 + 7\mu + 2 = 0$ M1

$(3\mu + 1)(\mu + 2) = 0$: $\mu = -2$ gives P, so $\mu = -1/3$ $B(14/3, 8/3, -4/3)$ A1

(Total for Question 9 is 8 marks)

DO NOT WRITE IN THIS AREA
DO NOT WRITE IN THIS AREA
DO NOT WRITE IN THIS AREA
DO NOT WRITE IN THIS AREA
DO NOT WRITE IN THIS AREA
DO NOT WRITE IN THIS AREA

★★★★★
Join students already acing their exams.
Book your FREE lesson at www.eclassroom.org.uk

10. A rumour spreads through a town. The number of people who have heard the rumour, P thousand, t days after it starts, is modelled by the differential equation

$$\frac{dP}{dt} = \frac{P(4-P)}{8} \qquad t \geqslant 0,\ 0 < P < 4$$

Initially 1000 people have heard the rumour.

(a) Express $\dfrac{1}{P(4-P)}$ in partial fractions.

(2)

(b) Solve the differential equation to show that

$$P = \frac{4}{1+3e^{-\frac{1}{2}t}}$$

(5)

(c) Sketch the graph of P against t, showing the value of P when $t = 0$ and the equation of the asymptote.

(1)

(a) $1 \equiv A(4-P) + BP$: $P = 0$: $A = \frac{1}{4}$; $P = 4$: $B = \frac{1}{4}$ M1

$1/(4P) + 1/(4(4-P))$ A1

(b) Separate: $\int \frac{8}{P(4-P)}\,dP = \int 1\,dt$ M1

$8 \times \frac{1}{4}(\ln P - \ln(4-P)) = t + c$ (careful: $\int \frac{1}{4-P}\,dP = -\ln(4-P)$) M1

$2\ln\left(\frac{P}{4-P}\right) = t + c$ A1

$t = 0$, $P = 1$ (thousand): $2\ln\left(\frac{1}{3}\right) = c \Rightarrow c = -2\ln 3$ M1

$\ln\left(\frac{P}{4-P}\right) = \frac{1}{2}t - \ln 3 \Rightarrow \frac{P}{4-P} = (1/3)e^{t/2} \Rightarrow 3P = (4-P)e^{t/2}$

$P(3+e^{t/2}) = 4e^{t/2} \Rightarrow P = 4 \div (1+3e^{-t/2})$ ✓ (divide by $e^{t/2}$) A1

(c) $t = 0$: $P = 1$. As $t \to \infty$, $e^{-t/2} \to 0$, so $P \to 4$.

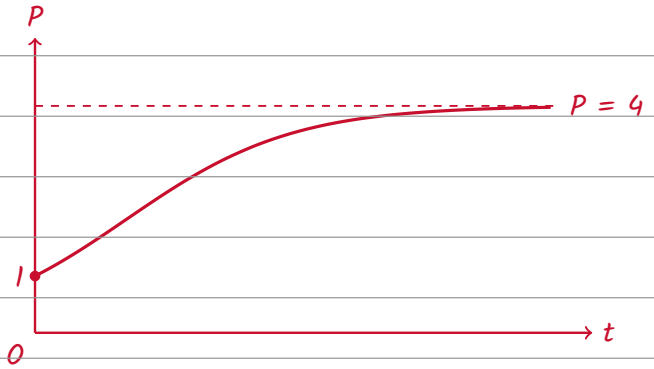

B1

DO NOT WRITE IN THIS AREA
DO NOT WRITE IN THIS AREA
DO NOT WRITE IN THIS AREA
DO NOT WRITE IN THIS AREA
DO NOT WRITE IN THIS AREA
DO NOT WRITE IN THIS AREA

★★★★★
Join students already acing their exams.
Book your FREE lesson at www.eclassroom.org.uk

Question 10 continued

DO NOT WRITE IN THIS AREA
DO NOT WRITE IN THIS AREA
DO NOT WRITE IN THIS AREA
DO NOT WRITE IN THIS AREA
DO NOT WRITE IN THIS AREA
DO NOT WRITE IN THIS AREA

(Total for Question 10 is 8 marks)

TOTAL FOR PAPER IS 75 MARKS

END

★★★★★

Join students already acing their exams.
Book your FREE lesson at www.eclassroom.org.uk