eClassroom

INTERNATIONAL A LEVEL MATHEMATICS • DECISION 1 (WDM11)

Decision 1 Practice Paper 2

Edexcel IAL Decision 1

AIMING FOR A

Written in the style of the Pearson Edexcel International Advanced Level paper (WDM11/01) • Calculator allowed

A full 75-mark paper, harder than a typical real series, with fewer steps given and chapters combined in most questions

Time	Total	You must have
1 hour 30 minutes	**75 marks**	**Calculator. The answer-book pages follow each question**

Instructions

- Use black ink or ball-point pen. Pencil may be used for diagrams and sketches.
- Answer **all** questions. Use the **D1 ANSWER BOOK** pages as the answer book.
- Show enough working to make your method clear. Answers without working may not gain full credit.
- Give inexact answers to **three significant figures** unless the question says otherwise.

Information

- There are 8 questions in this paper. The total mark is 75.
- The marks for each question are shown in brackets.

Advice

- Sit the paper in one go, in 1 hour 30 minutes, with the mark scheme closed.
- Read each question carefully and try every question. Check your answers if you have time.
- Then mark it line by line with the mark scheme and fill in your score.

Track your score

Q	Topic	Marks	Score
1	A flow chart with exact values	7	
2	Quick sort, bin packing and a bin size	8	
3	Prim's algorithm on a distance matrix	9	
4	Dijkstra's algorithm and route inspection	10	
5	Travelling salesman bounds with an unknown	10	
6	Drawing an activity network	8	
7	Critical path analysis and scheduling	12	
8	Linear programming with integer solutions	11	
	Total	**75**	

Rough grade guide (out of 75): A **53** • B **46** • C **39**

Based on recent WDM11 grade boundaries. Real boundaries change every series, so treat this as a guide, not a grade.

Mark scheme **Exam questions by topic** **More practice papers**

Name ..... Date .....

★★★★★

Join students already acing their exams.

Book your FREE lesson at www.eclassroom.org.uk

1.

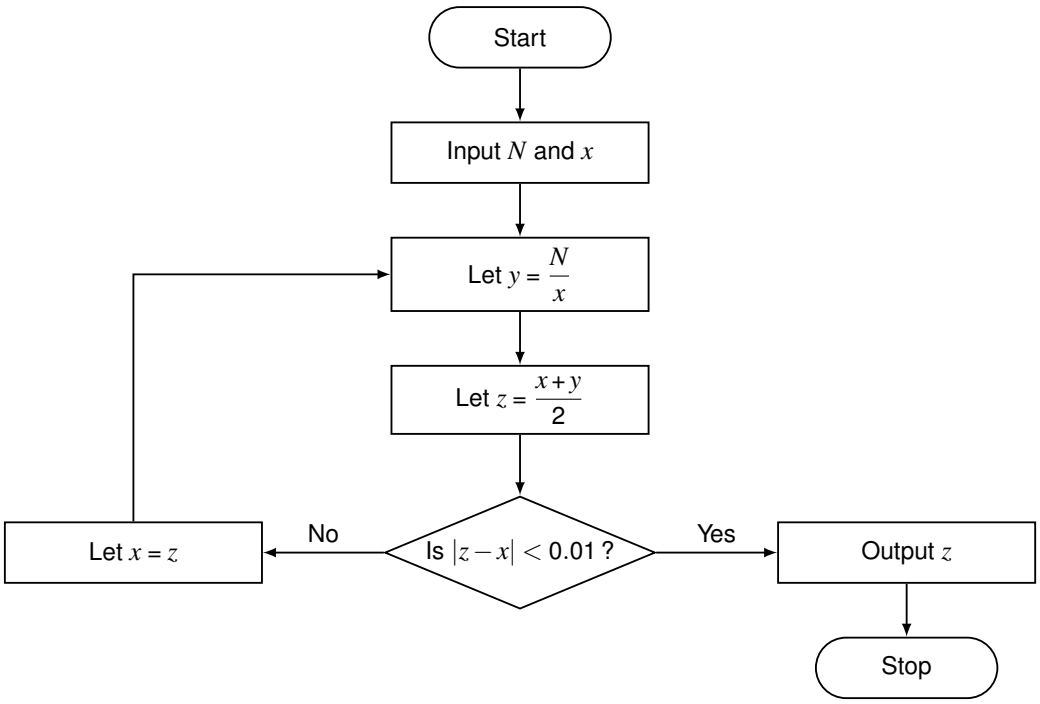

Figure 1

Figure 1 shows a flow chart.

(a) Implement the algorithm with $N = 10$ and $x = 3$, completing the table in the answer book. Give your values as exact fractions and state the output.

(4)

(b) State the purpose of the algorithm.

(1)

(c) State the output when the algorithm is implemented with $N = 10$ and $x = -3$. Give a reason for your answer.

(2)

DO NOT WRITE IN THIS AREA

★★★★★
Join students already acing their exams.
Book your FREE lesson at www.eclassroom.org.uk

Question 1 continued **D1 ANSWER BOOK**

In the exam this page is printed in the separate D1 answer book. Write your working here, on the copy provided.

x	y	z	$\lvert z-x\rvert$	Is $\lvert z-x\rvert < 0.01$?

Output: _____

(Total for Question 1 is 7 marks)

DO NOT WRITE IN THIS AREA
DO NOT WRITE IN THIS AREA
DO NOT WRITE IN THIS AREA
DO NOT WRITE IN THIS AREA
DO NOT WRITE IN THIS AREA
DO NOT WRITE IN THIS AREA

★★★★★
Join students already acing their exams.
Book your FREE lesson at www.eclassroom.org.uk

2. The list below shows the lengths, in cm, of ten pieces of wood.

23	9	31	14	26	18	7	35	12	21

(a) Use a quick sort to put the lengths into descending order. You must make your pivots clear.

(3)

The pieces are to be packed into boxes that are 50 cm long.

(b) Use the first-fit decreasing bin packing algorithm to pack the pieces into boxes.

(2)

The pieces are now to be packed into boxes that are each L cm long, where L is an integer. When the first-fit decreasing algorithm is used, the first box contains only the pieces of length 35 cm and 12 cm.

(c) Find the possible values of L

(3)

DO NOT WRITE IN THIS AREA
DO NOT WRITE IN THIS AREA
DO NOT WRITE IN THIS AREA
DO NOT WRITE IN THIS AREA
DO NOT WRITE IN THIS AREA
DO NOT WRITE IN THIS AREA

★★★★★
Join students already acing their exams.
Book your FREE lesson at www.eclassroom.org.uk

Question 2 continued **D1 ANSWER BOOK**

In the exam this page is printed in the separate D1 answer book. Write your working here, on the copy provided.

23	9	31	14	26	18	7	35	12	21

DO NOT WRITE IN THIS AREA

(Total for Question 2 is 8 marks)

★★★★★

Join students already acing their exams.

Book your FREE lesson at **www.eclassroom.org.uk**

3. The distance matrix shows the lengths, in km, of the roads between seven villages, A to G. A dash means that there is no direct road.

	A	B	C	D	E	F	G
A	–	17	–	–	–	–	11
B	17	–	20	12	–	–	15
C	–	20	–	13	24	–	–
D	–	12	13	–	18	22	–
E	–	–	24	18	–	9	28
F	–	–	–	22	9	–	21
G	11	15	–	–	28	21	–

(a) Use Prim's algorithm, starting at A, to find a minimum spanning tree for the network. You must list the arcs in the order that you select them.

(3)

(b) Draw your minimum spanning tree and state its weight.

(2)

A new road of length x km is to be built directly between A and C.

(c) Find the range of values of x for which the minimum spanning tree changes, and state which arc would leave the tree.

(2)

(d) Using the matrix, determine whether the original network is Eulerian, semi-Eulerian or neither. Give a reason for your answer.

(2)

DO NOT WRITE IN THIS AREA

★★★★★ Join students already acing their exams.
Book your FREE lesson at www.eclassroom.org.uk

Question 3 continued **D1 ANSWER BOOK**

In the exam this page is printed in the separate D1 answer book. Write your working here, on the copy provided.

	A	B	C	D	E	F	G
A	–	17	–	–	–	–	11
B	17	–	20	12	–	–	15
C	–	20	–	13	24	–	–
D	–	12	13	–	18	22	–
E	–	–	24	18	–	9	28
F	–	–	–	22	9	–	21
G	11	15	–	–	28	21	–

(Total for Question 3 is 9 marks)

DO NOT WRITE IN THIS AREA
DO NOT WRITE IN THIS AREA
DO NOT WRITE IN THIS AREA
DO NOT WRITE IN THIS AREA
DO NOT WRITE IN THIS AREA
DO NOT WRITE IN THIS AREA

★★★★★
Join students already acing their exams.
Book your FREE lesson at www.eclassroom.org.uk

4.

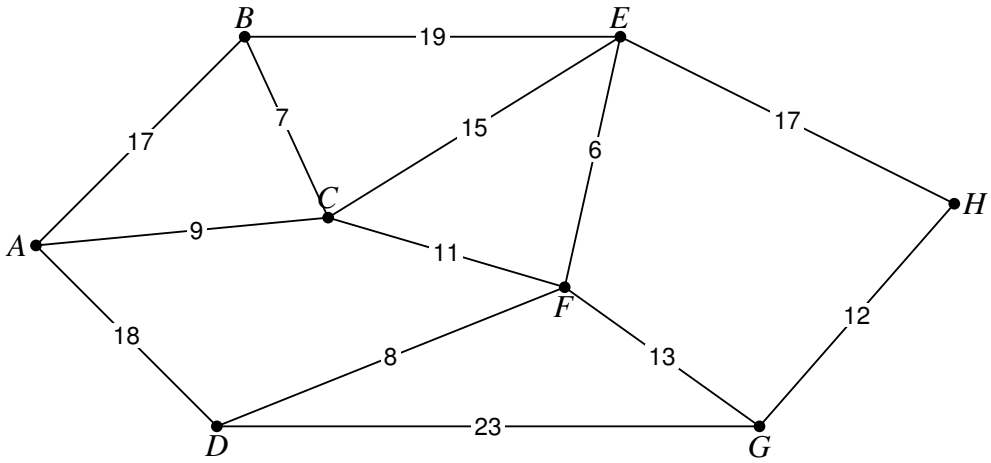

Figure 2

Figure 2 shows a network of cycle paths between eight points, A to H. The number on each arc is the length, in km, of that path. The total length of the paths is 175 km.

(a) Use Dijkstra's algorithm on Diagram 1 to find the shortest route from A to H. State the route and its length.

(4)

A park ranger must cycle along every path at least once, starting and finishing at A.

(b) Use the route inspection algorithm to find the length of the shortest route. You should use your answer to (a) where it helps, and you must make your working clear.

(4)

The ranger may instead start and finish at any two different points.

(c) State the two points that give the shortest route, and the length of this route.

(2)

DO NOT WRITE IN THIS AREA

★★★★★
Join students already acing their exams.
Book your FREE lesson at www.eclassroom.org.uk

Question 4 continued D1 ANSWER BOOK

In the exam this page is printed in the separate D1 answer book. Write your working here, on the copy provided.

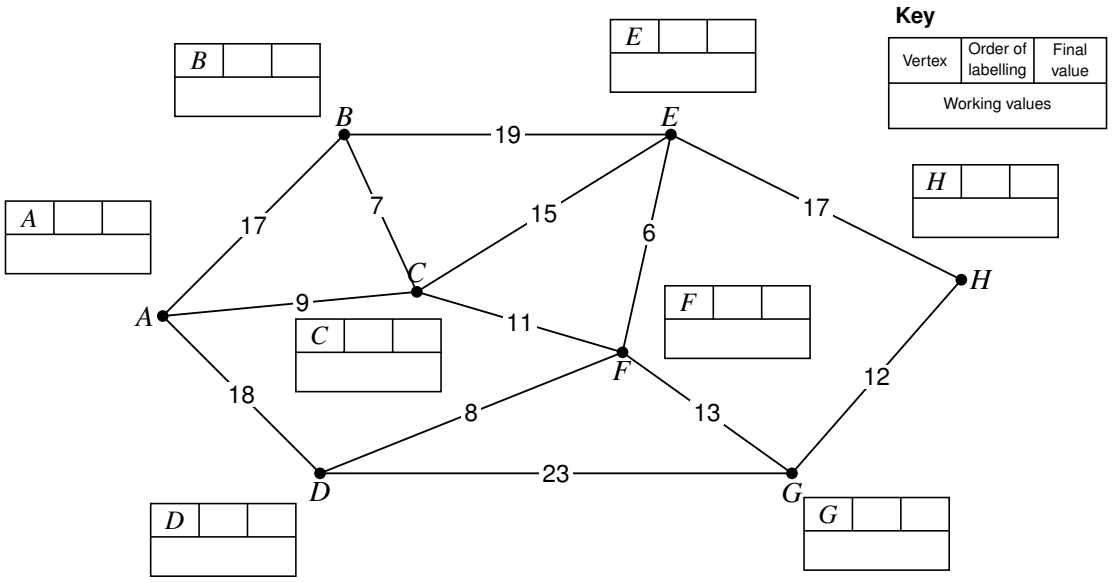

Diagram 1

Shortest route: _____

Length: _____

(Total for Question 4 is 10 marks)

DO NOT WRITE IN THIS AREA

★★★★★ Join students already acing their exams.
Book your FREE lesson at www.eclassroom.org.uk

5. The table shows the least distances, in km, between six towns, A to F. The least distance between C and E is x km.

	A	B	C	D	E	F
A	–	31	18	34	29	33
B	31	–	33	22	36	24
C	18	33	–	30	x	29
D	34	22	30	–	19	28
E	29	36	x	19	–	32
F	33	24	29	28	32	–

The nearest neighbour algorithm, starting at A, gives the route $ACEDBFA$

(a) Explain why $x < 29$

(2)

(b) Write down an upper bound for the length of the optimal route, in terms of x

(2)

(c) Given that $x < 28$, find a lower bound for the length of the optimal route by deleting B and all of its arcs. Give your answer in terms of x

(3)

The optimal route has length 141 km.

(d) Find the range of possible values of x

(3)

DO NOT WRITE IN THIS AREA

Question 5 continued **D1 ANSWER BOOK**

In the exam this page is printed in the separate D1 answer book. Write your working here, on the copy provided.

	A	B	C	D	E	F
A	–	31	18	34	29	33
B	31	–	33	22	36	24
C	18	33	–	30	x	29
D	34	22	30	–	19	28
E	29	36	x	19	–	32
F	33	24	29	28	32	–

DO NOT WRITE IN THIS AREA

(Total for Question 5 is 10 marks)

★★★★★
Join students already acing their exams.
Book your FREE lesson at www.eclassroom.org.uk

6. The table shows the immediate predecessors of the activities in a project.

Activity	Immediately preceded by
A	–
B	–
C	A
D	A, B
E	C
F	C
G	D
H	E, F
I	G, H

(a) Draw the activity network in the answer book, using activity on arc and exactly two dummies.

(6)

(b) Explain why each of your two dummies is needed.

(2)

DO NOT WRITE IN THIS AREA

DO NOT WRITE IN THIS AREA

DO NOT WRITE IN THIS AREA

DO NOT WRITE IN THIS AREA

DO NOT WRITE IN THIS AREA

DO NOT WRITE IN THIS AREA

Question 6 continued **D1 ANSWER BOOK**

In the exam this page is printed in the separate D1 answer book. Write your working here, on the copy provided.

DO NOT WRITE IN THIS AREA
DO NOT WRITE IN THIS AREA
DO NOT WRITE IN THIS AREA
DO NOT WRITE IN THIS AREA
DO NOT WRITE IN THIS AREA
DO NOT WRITE IN THIS AREA

(Total for Question 6 is 8 marks)

★★★★★
Join students already acing their exams.
Book your FREE lesson at **www.eclassroom.org.uk**

7.

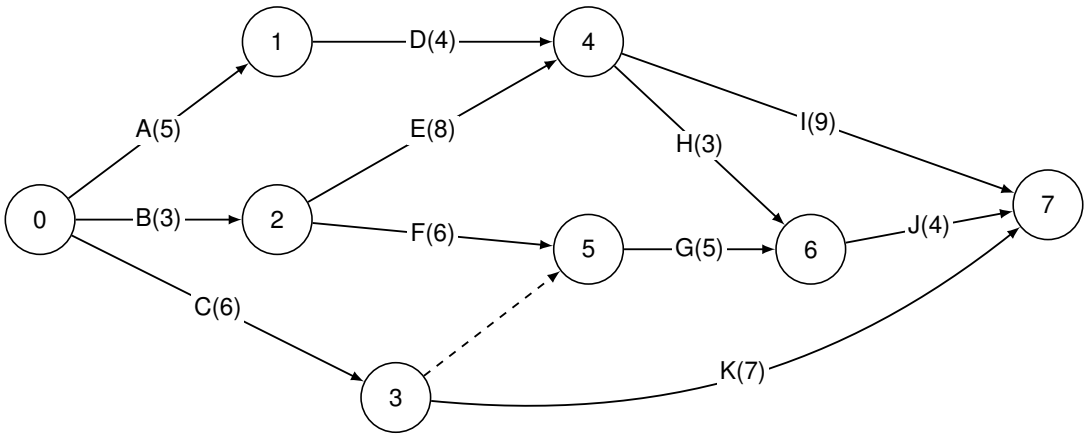

Figure 3

Figure 3 is an activity network for a project. The activities are represented by the arcs, and the number in brackets on each arc is the duration, in days, of that activity.

(a) Complete Diagram 2 in the answer book to show the early event times and the late event times.

(3)

(b) State the critical activities and the minimum completion time of the project.

(1)

(c) On the grid in the answer book, draw a cascade (Gantt) chart for the project.

(3)

Each activity needs one worker.

(d) Calculate a lower bound for the number of workers needed to complete the project in the minimum time.

(2)

Only the number of workers in your answer to (d) is available.

(e) Draw a schedule on the grid in the answer book so that the project is completed in the shortest possible time with these workers. State this time.

(3)

DO NOT WRITE IN THIS AREA

★★★★★
Join students already acing their exams.
Book your FREE lesson at www.eclassroom.org.uk

Question 7 continued D1 ANSWER BOOK

In the exam this page is printed in the separate D1 answer book. Write your working here, on the copy provided.

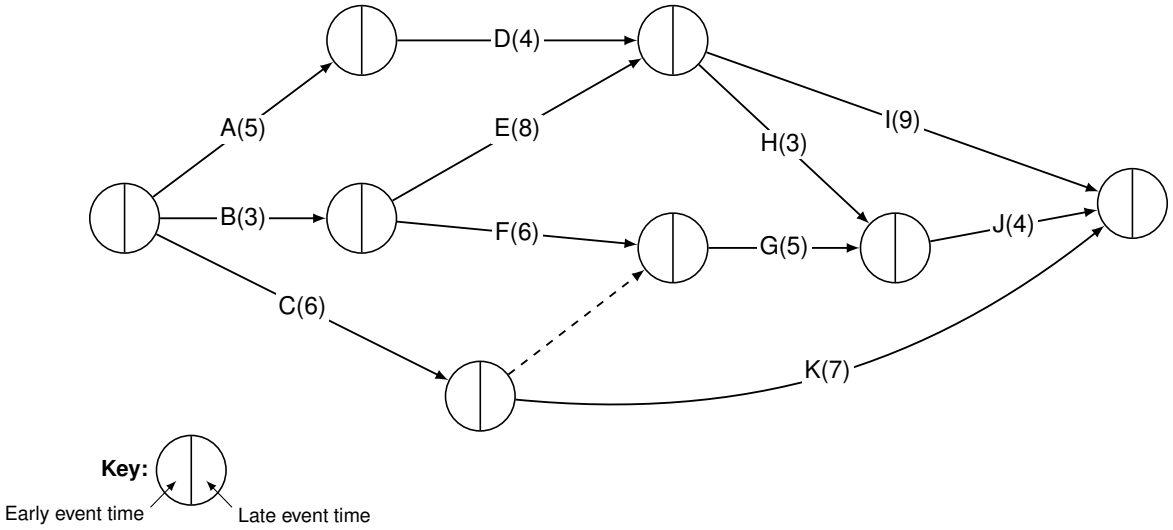

Diagram 2

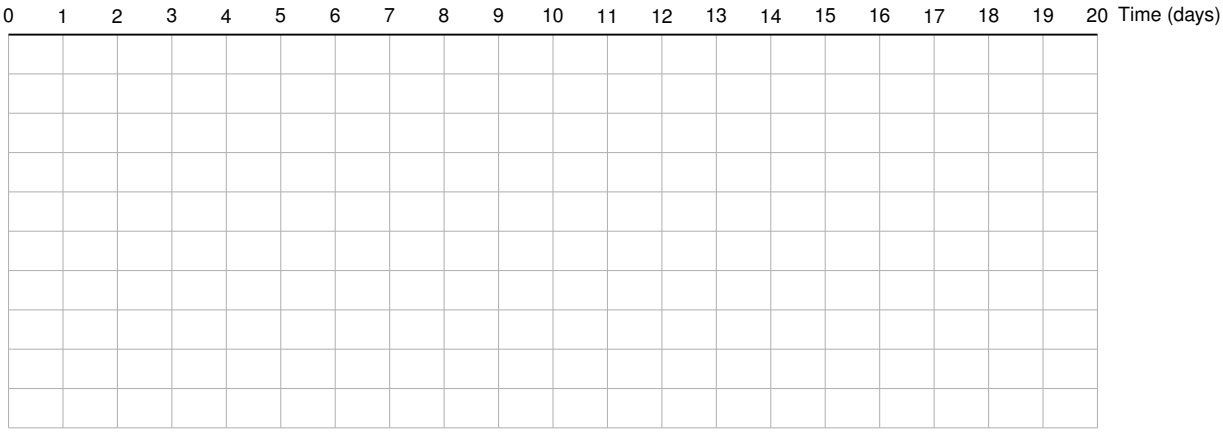

Diagram 3

DO NOT WRITE IN THIS AREA
DO NOT WRITE IN THIS AREA
DO NOT WRITE IN THIS AREA
DO NOT WRITE IN THIS AREA
DO NOT WRITE IN THIS AREA
DO NOT WRITE IN THIS AREA

★★★★★
Join students already acing their exams.
Book your FREE lesson at www.eclassroom.org.uk

Question 7 continued **D1 ANSWER BOOK**

In the exam this page is printed in the separate D1 answer book. Write your working here, on the copy provided.

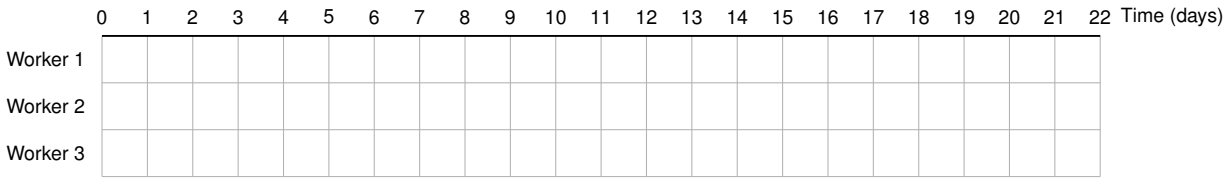

Diagram 4

DO NOT WRITE IN THIS AREA
DO NOT WRITE IN THIS AREA
DO NOT WRITE IN THIS AREA
DO NOT WRITE IN THIS AREA
DO NOT WRITE IN THIS AREA
DO NOT WRITE IN THIS AREA

(Total for Question 7 is 12 marks)

★★★★★
Join students already acing their exams.
Book your FREE lesson at www.eclassroom.org.uk

8. A farmer has 60 hectares of land on which to grow wheat and barley. Let x be the number of hectares of wheat and y the number of hectares of barley.

Each hectare of wheat needs 5 units of fertiliser and each hectare of barley needs 2 units. There are 200 units of fertiliser available. At least 30% of the land planted must be barley, and the area of barley must be no more than twice the area of wheat.

(a) Formulate the constraints, other than $x \geqslant 0$ and $y \geqslant 0$. Simplify each one so that the coefficients are integers.

(4)

The lines for two of the constraints are drawn on Diagram 5 in the answer book.

(b) Add the lines for your other two constraints to Diagram 5 and label the feasible region R.

(2)

The profit is £300 for each hectare of wheat and £200 for each hectare of barley. The farmer plants a whole number of hectares of each crop.

(c) Find the number of hectares of each crop that the farmer should plant to maximise the profit, and state the maximum profit. You must make your method clear.

(3)

The profit for each hectare of barley stays at £200, but the profit for each hectare of wheat changes to £k. The land is no longer restricted to whole numbers of hectares.

(d) Find the range of values of k for which the point where $x + y = 60$ meets $5x + 2y = 200$ is an optimal point.

(2)

DO NOT WRITE IN THIS AREA

DO NOT WRITE IN THIS AREA

DO NOT WRITE IN THIS AREA

DO NOT WRITE IN THIS AREA

DO NOT WRITE IN THIS AREA

DO NOT WRITE IN THIS AREA

★★★★★
Join students already acing their exams.
Book your FREE lesson at www.eclassroom.org.uk

Question 8 continued D1 ANSWER BOOK

In the exam this page is printed in the separate D1 answer book. Write your working here, on the copy provided.

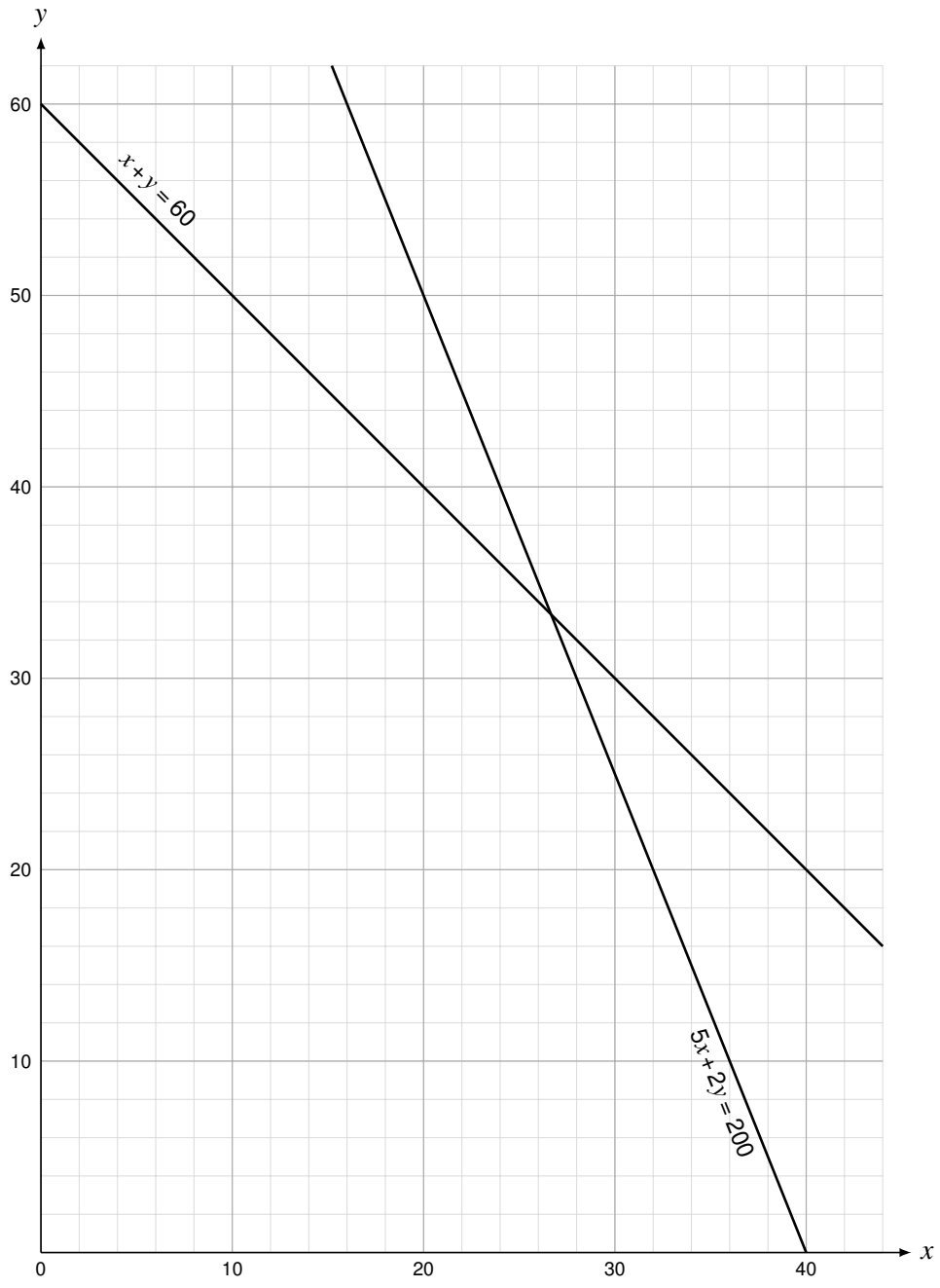

Diagram 5

(Total for Question 8 is 11 marks)

TOTAL FOR PAPER IS 75 MARKS

END

DO NOT WRITE IN THIS AREA
DO NOT WRITE IN THIS AREA
DO NOT WRITE IN THIS AREA
DO NOT WRITE IN THIS AREA
DO NOT WRITE IN THIS AREA

★★★★★
Join students already acing their exams.
Book your FREE lesson at www.eclassroom.org.uk