eClassroom

INTERNATIONAL A LEVEL MATHEMATICS • MECHANICS 1 (WME01)

Mechanics 1 Practice Paper 2

Edexcel IAL Mechanics 1

AIMING FOR A

Written in the style of the Pearson Edexcel International Advanced Level paper (WME01/01) • Calculator allowed

A full 75-mark paper, harder than a typical real series, with fewer steps given and topics combined in every question

Time	Total	You must have
1 hour 30 minutes	**75 marks**	**Mathematical Formulae and Statistical Tables, calculator**

Instructions

- Use black ink or ball-point pen. Pencil may be used for diagrams and sketches.
- Answer **all** questions, in the spaces provided.
- Show enough working to make your method clear. Answers without working may not gain full credit.
- Whenever a numerical value of g is required, take $g = 9.8\,\text{m s}^{-2}$, and give your answer to either **two or three significant figures**.

Information

- There are 7 questions in this paper. The total mark is 75.
- The marks for each question are shown in brackets.

Advice

- Sit the paper in one go, in 1 hour 30 minutes, with the mark scheme closed.
- Read each question carefully and try every question. Check your answers if you have time.
- Then mark it line by line with the mark scheme and fill in your score.

Track your score

Q	Topic	Marks	Score
1	An impulse, friction and a collision	9	
2	Two ships and their closest approach	10	
3	A non-uniform rod	10	
4	A horizontal force on a rough slope	11	
5	A lift and a box	11	
6	A slope, a pulley and a landing	12	
7	A car towing a trailer	12	
	Total	**75**	

Rough grade guide (out of 75): A **55** • B **47** • C **39**

Based on recent WME01 grade boundaries. Real boundaries change every series, so treat this as a guide, not a grade.

Mark scheme **Exam questions by topic** **More practice papers**

Name ..... Date .....

★★★★★

Join students already acing their exams.

Book your FREE lesson at www.eclassroom.org.uk

1. A particle A of mass 0.5 kg is at rest on a rough horizontal floor. A particle B of mass 1.5 kg is at rest on the floor 5 m from A

A is given an impulse of magnitude 4 N s, directed towards B. The coefficient of friction between A and the floor is $\frac{2}{7}$

(a) Find the speed of A immediately after the impulse.

(2)

(b) Find the speed of A immediately before it hits B

(3)

Immediately after the collision, B moves with speed 2.5 m s^{-1}

(c) Find the speed and the direction of motion of A immediately after the collision.

(3)

(d) Find the magnitude of the impulse exerted on B in the collision.

(1)

DO NOT WRITE IN THIS AREA
DO NOT WRITE IN THIS AREA
DO NOT WRITE IN THIS AREA
DO NOT WRITE IN THIS AREA
DO NOT WRITE IN THIS AREA
DO NOT WRITE IN THIS AREA

Question 1 continued

DO NOT WRITE IN THIS AREA
DO NOT WRITE IN THIS AREA
DO NOT WRITE IN THIS AREA
DO NOT WRITE IN THIS AREA
DO NOT WRITE IN THIS AREA
DO NOT WRITE IN THIS AREA

(Total for Question 1 is 9 marks)

★★★★★
Join students already acing their exams.
Book your FREE lesson at www.eclassroom.org.uk

2. *In this question,* $\mathbf{i}$ *and* $\mathbf{j}$ *are horizontal unit vectors due east and due north respectively, and position vectors are given relative to a fixed origin* O

Two ships, A and B, move with constant velocities. At noon, A is at the point with position vector $(2\mathbf{i}+5\mathbf{j})$ km and B is at $(14\mathbf{i}+3\mathbf{j})$ km. The velocity of A is $(3\mathbf{i}+4\mathbf{j})$ km h^{-1} and the velocity of B is $(-3\mathbf{i}+6\mathbf{j})$ km h^{-1}

(a) Find the bearing on which A is moving.

(2)

(b) Find the time at which B is due north of A, and the distance between them at that time.

(3)

At t hours after noon, the distance between the ships is d km.

(c) Find an expression for d^2 in terms of t

(3)

(d) Find the shortest distance between the ships.

(2)

DO NOT WRITE IN THIS AREA

Question 2 continued

DO NOT WRITE IN THIS AREA
DO NOT WRITE IN THIS AREA
DO NOT WRITE IN THIS AREA
DO NOT WRITE IN THIS AREA
DO NOT WRITE IN THIS AREA
DO NOT WRITE IN THIS AREA

(Total for Question 2 is 10 marks)

★★★★★
Join students already acing their exams.
Book your FREE lesson at www.eclassroom.org.uk

3. A non-uniform rod AB has length 4 m. Its centre of mass is at G

When the rod rests horizontally on two supports, one at A and one at B, the reaction at A is twice the reaction at B

(a) Show that $AG = \frac{4}{3}$ m.

(3)

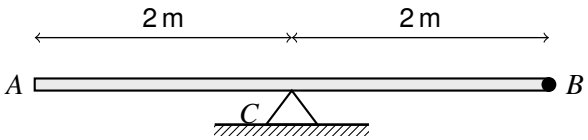

Figure 1

A particle of mass 3 kg is now attached to the rod at B. The rod rests horizontally in equilibrium on a single support at C, the midpoint of AB, as shown in Figure 1.

(b) Find the mass of the rod.

(3)

The particle is removed. The rod rests horizontally on two supports, one 1 m from A and the other 1 m from B. A particle of mass M kg is placed at B

(c) Find the greatest value of M for which the rod remains in equilibrium.

(4)

DO NOT WRITE IN THIS AREA

Join students already acing their exams.
Book your FREE lesson at www.eclassroom.org.uk

Question 3 continued

DO NOT WRITE IN THIS AREA
DO NOT WRITE IN THIS AREA
DO NOT WRITE IN THIS AREA
DO NOT WRITE IN THIS AREA
DO NOT WRITE IN THIS AREA
DO NOT WRITE IN THIS AREA

(Total for Question 3 is 10 marks)

★★★★★
Join students already acing their exams.
Book your FREE lesson at www.eclassroom.org.uk

4.

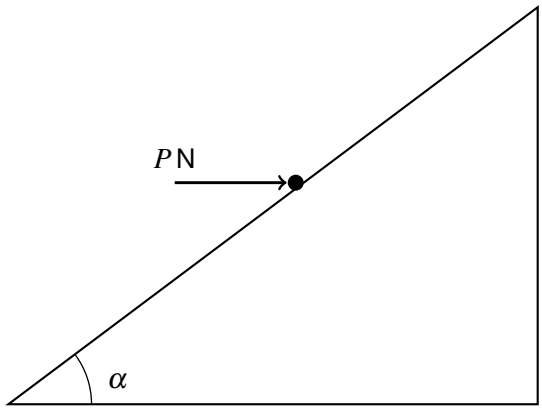

Figure 2

A particle of mass 2 kg rests on a rough plane inclined at an angle α to the horizontal, where $\tan\alpha = \frac{3}{4}$. The coefficient of friction between the particle and the plane is 0.2

The particle is held in equilibrium by a horizontal force of magnitude P newtons, acting in a vertical plane containing a line of greatest slope of the plane, as shown in Figure 2.

(a) Find the least possible value of P

(5)

(b) Find the greatest possible value of P

(4)

(c) Given that $P = 15$, find the magnitude and direction of the friction acting on the particle.

(2)

DO NOT WRITE IN THIS AREA
DO NOT WRITE IN THIS AREA
DO NOT WRITE IN THIS AREA
DO NOT WRITE IN THIS AREA
DO NOT WRITE IN THIS AREA
DO NOT WRITE IN THIS AREA

Question 4 continued

DO NOT WRITE IN THIS AREA
DO NOT WRITE IN THIS AREA
DO NOT WRITE IN THIS AREA
DO NOT WRITE IN THIS AREA
DO NOT WRITE IN THIS AREA
DO NOT WRITE IN THIS AREA

(Total for Question 4 is 11 marks)

★★★★★
Join students already acing their exams.
Book your FREE lesson at www.eclassroom.org.uk

5. A lift of mass 600 kg carries a box of mass 40 kg on its floor. The lift is raised from rest by a vertical cable. It accelerates uniformly at $1.5\,\text{m}\,\text{s}^{-2}$ for 4 s, then moves at constant speed for T seconds, and then decelerates uniformly, coming to rest after a further 3 s. The lift rises 45 m in total.

(a) Sketch a speed-time graph for the motion of the lift.

(2)

(b) Find the value of T

(3)

(c) Find the tension in the cable while the lift is accelerating.

(3)

(d) Find the magnitude of the force exerted on the box by the floor of the lift while the lift is decelerating.

(3)

DO NOT WRITE IN THIS AREA
DO NOT WRITE IN THIS AREA
DO NOT WRITE IN THIS AREA
DO NOT WRITE IN THIS AREA
DO NOT WRITE IN THIS AREA
DO NOT WRITE IN THIS AREA

Question 5 continued

DO NOT WRITE IN THIS AREA
DO NOT WRITE IN THIS AREA
DO NOT WRITE IN THIS AREA
DO NOT WRITE IN THIS AREA
DO NOT WRITE IN THIS AREA
DO NOT WRITE IN THIS AREA

(Total for Question 5 is 11 marks)

★★★★★
Join students already acing their exams.
Book your FREE lesson at www.eclassroom.org.uk

6.

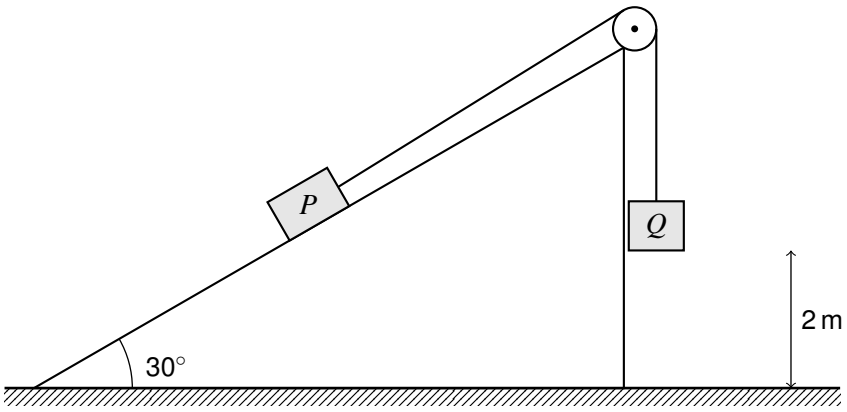

Figure 3

A particle P of mass 4 kg rests on a rough plane inclined at 30° to the horizontal. It is attached to a light inextensible string which passes over a small smooth pulley at the top of the plane. The other end of the string is attached to a particle Q of mass 5 kg, which hangs freely 2 m above the ground, as shown in Figure 3. The part of the string from P to the pulley is parallel to a line of greatest slope, and the coefficient of friction between P and the plane is 0.25

The system is released from rest with the string taut. P does not reach the pulley.

(a) Find the acceleration of P and the tension in the string while Q is falling.

(6)

(b) Find the speed of Q just before it hits the ground.

(2)

Q does not rebound.

(c) Find the total distance that P moves up the plane before it first comes to rest.

(3)

(d) Determine whether P then remains at rest, giving a reason.

(1)

DO NOT WRITE IN THIS AREA

★★★★★
Join students already acing their exams.
Book your FREE lesson at www.eclassroom.org.uk

Question 6 continued

DO NOT WRITE IN THIS AREA
DO NOT WRITE IN THIS AREA
DO NOT WRITE IN THIS AREA
DO NOT WRITE IN THIS AREA
DO NOT WRITE IN THIS AREA
DO NOT WRITE IN THIS AREA

(Total for Question 6 is 12 marks)

★★★★★
Join students already acing their exams.
Book your FREE lesson at www.eclassroom.org.uk

7.

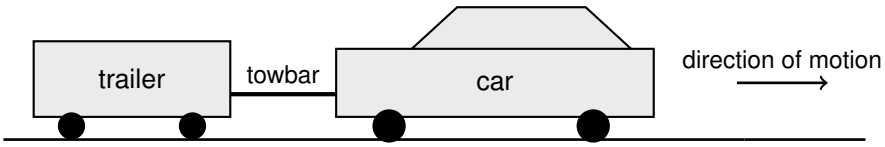

Figure 4

A car of mass 1200 kg tows a trailer of mass 400 kg along a straight horizontal road, using a light rigid horizontal towbar, as shown in Figure 4. The resistances to motion of the car and the trailer are constant, of magnitude 300 N and 200 N respectively. The engine of the car produces a constant driving force of 2100 N.

(a) Find the acceleration of the car and the tension in the towbar.

(5)

When the car is moving at $15\,\text{m s}^{-1}$, the engine is switched off and the brakes are applied to the car only. The brakes provide an extra constant resistance of B newtons on the car, and the car and trailer decelerate at $2.5\,\text{m s}^{-2}$

(b) Find the value of B, and the magnitude of the force in the towbar, stating whether it is a tension or a thrust.

(5)

(c) Find the distance travelled while the car is braking.

(1)

(d) State how you have used the fact that the towbar is light.

(1)

DO NOT WRITE IN THIS AREA

Question 7 continued

DO NOT WRITE IN THIS AREA
DO NOT WRITE IN THIS AREA
DO NOT WRITE IN THIS AREA
DO NOT WRITE IN THIS AREA
DO NOT WRITE IN THIS AREA
DO NOT WRITE IN THIS AREA

(Total for Question 7 is 12 marks)

TOTAL FOR PAPER IS 75 MARKS

END

★★★★★
Join students already acing their exams.
Book your FREE lesson at www.eclassroom.org.uk