eClassroom

INTERNATIONAL A LEVEL MATHEMATICS • DECISION 1 (WDM11)

Decision 1 Practice Paper 3

Worked Solutions

AIMING FOR A/A*

Written in the style of the Pearson Edexcel International Advanced Level paper (WDM11/01) • 75 marks

Every question solved in full on the paper itself, the way your teacher would write it out

How to read these solutions. Each page is the real question page, with a full answer written on the answer lines.

Red pen

M1 A1

boxed

the working a full-marks answer shows, with a short note on why each step is taken

the mark earned on that line: M = method, A = accuracy, B = independent mark

the final answer to each part

Sit the paper first. These solutions are most useful after you have tried every question yourself under timed conditions. Mark your paper with the mark scheme, then use this booklet to see exactly how each lost mark could have been earned.

Q	Topic	Marks	Page
1	Sorting and searching with unknowns	10	2
2	Bin packing and full bins	11	3
3	Degrees and a tree with a required arc	11	4
4	Route inspection with an unknown arc	11	6
5	A practical travelling salesman problem	10	8
6	Critical path analysis and workers	11	10
7	Linear programming in three variables	11	12

Question paper & mark scheme | Exam questions by topic | More practice papers

1. **(i)** A bubble sort is used to put the list below into ascending order, where k is an integer that is different from each of the other numbers in the list.

14	8	21	k	17	11

After the second pass of the bubble sort, the list is

8 14 17 11 k 21

(a) Find the possible values of k. You must make your reasoning clear.

(4)

(b) Taking $k = 19$, complete the bubble sort, giving the state of the list after each further pass.

(2)

(ii) The list below is in ascending order and contains eleven different integers. The value n is unknown.

1	2	3	4	5	6	7	8	9	10	11
12	19	23	31	38	n	47	52	58	64	71

The binary search algorithm is used to search the list for the number 44. The number 44 is compared with exactly three items in the list, and the search ends with 44 not being found.

(c) Find the possible values of n. You must make your method clear.

(4)

(a) 21 is last after pass 2, so it reached the end in pass 1: $k < 21$ M1

(if $k > 21$, then k would have moved to the end instead)

After pass 1: 8 14 k 17 11 21. In pass 2, k moves past 17, so $k > 17$ M1

$17 < k < 21$, and k is not 17 or 21, so $k = 18, 19$ or 20 A1 A1

(b) Pass 3: 8 14 11 17 19 21 B1

Pass 4: 8 11 14 17 19 21 Pass 5: no swaps, so sorted B1

(c) First comparison: item $(1 + 11) \div 2 = 6$, which is n M1

If $n < 44$: items 9 (58), 8 (52), 7 (47) follow: four comparisons, so $n > 44$ M1

$n > 44$: item 3 (23), then item 5 (38), then the list is empty: three ✓ A1

$44 < n < 47$, different integers: $n = 45$ or $n = 46$ A1

(Total for Question 1 is 10 marks)

DO NOT WRITE IN THIS AREA
DO NOT WRITE IN THIS AREA
DO NOT WRITE IN THIS AREA
DO NOT WRITE IN THIS AREA
DO NOT WRITE IN THIS AREA
DO NOT WRITE IN THIS AREA

★★★★★
Join students already acing their exams.
Book your FREE lesson at www.eclassroom.org.uk

2. A plumber needs ten lengths of pipe, in cm, as listed below. Each length is cut from a 40 cm section, and the plumber wants to use as few sections as possible.

22	10	20	17	21	8	15	12	11	19

(a) Calculate a lower bound for the number of sections needed.

(2)

(b) Use the first-fit decreasing bin packing algorithm to allocate the lengths to sections.

(3)

(c) Show that the lengths can be cut from fewer sections than your answer to (b), and explain why your new allocation is optimal.

(3)

An eleventh length of pipe, y cm, is also needed, where y is an integer.

(d) Find the greatest value of y for which all eleven lengths can still be cut from the number of sections in your answer to (c). Justify your answer.

(3)

(a) $155 \div 40 = 3.875$, so a lower bound is $\boxed{4 \text{ sections}}$ M1 A1

(b) In order: 22, 21, 20, 19, 17, 15, 12, 11, 10, 8 M1

S1: 22, 17 S2: 21, 19 S3: 20, 15 A1

S4: 12, 11, 10 S5: 8 (5 sections) A1

(c) Full sections: $22 + 10 + 8 = 40$, $21 + 19 = 40$, $17 + 12 + 11 = 40$ M1

Last section: $20 + 15 = 35$. That is $\boxed{4 \text{ sections}}$ A1

4 equals the lower bound, so it cannot be done in fewer: optimal. B1

(d) 4 sections hold 160 cm: $155 + y \leqslant 160$, so $y \leqslant 5$ M1

$y = 5$ goes with 20 and 15 ($35 + 5 = 40$); the other three are full. M1

$\boxed{y = 5}$ A1

(Total for Question 2 is 11 marks)

DO NOT WRITE IN THIS AREA

★★★★★ Join students already acing their exams.
Book your FREE lesson at www.eclassroom.org.uk

3. **(i)** A simple connected graph has six vertices. Five of the vertices have degrees 1, 2, 2, 3 and 3, and the sixth vertex has degree d

(a) Explain why d must be odd.

(1)

(b) Given that the graph has 7 arcs, find d

(2)

(c) Determine whether the graph is Eulerian, semi-Eulerian or neither. Give a reason for your answer.

(1)

(ii) The distance matrix shows the lengths, in km, of possible pipelines between six sites, A to F

	A	B	C	D	E	F
A	–	26	18	31	22	35
B	26	–	14	28	39	17
C	18	14	–	21	30	25
D	31	28	21	–	16	33
E	22	39	30	16	–	29
F	35	17	25	33	29	–

(d) Use Prim's algorithm, starting at A, to find a minimum spanning tree. State the order in which you select the arcs and the weight of the tree.

(3)

The pipeline BE must be built.

(e) Find the minimum total length of a network that connects all six sites and includes BE, and state the arcs it uses.

(3)

(f) Explain how your answer to (e) could be found directly from your tree in (d).

(1)

(a) The degree sum = 2 × arcs, so it is even; 11 + d is even, so d is odd. B1

(b) 11 + d = 2 × 7 = 14, so d = 3 M1 A1

(c) Odd degrees 1, 3, 3, 3: four odd vertices, so neither B1

DO NOT WRITE IN THIS AREA

Question 3 continued D1 ANSWER BOOK

In the exam this page is printed in the separate D1 answer book. Write your working here, on the copy provided.

	1	3	2	5	6	4
	A	B	C	D	E	F
A	–	26	(18)	31	22	35
B	26	–	14	28	39	(17)
C	18	(14)	–	(21)	30	25
D	31	28	21	–	(16)	33
E	22	39	30	16	–	29
F	35	17	25	33	29	–

Copy for part (e)

	5	1	2	3	1	4
	A	B	C	D	E	F
A	–	26	18	31	22	35
B	26	–	(14)	28	[39]	(17)
C	(18)	14	–	21	30	25
D	31	28	21	–	16	33
E	22	39	30	(16)	–	29
F	35	17	25	33	29	–

(d) AC 18, BC 14, BF 17, CD 21, DE 16 M1 A1

Weight = [86 km] A1

(e) Start with B and E both in the tree (BE boxed), then Prim: M1

BE 39, BC 14, DE 16, BF 17, AC 18: total [104 km] A1 A1

(f) BE makes the cycle B C D E: remove its longest arc CD, 86 + 39 – 21 B1

(Total for Question 3 is 11 marks)

DO NOT WRITE IN THIS AREA
DO NOT WRITE IN THIS AREA
DO NOT WRITE IN THIS AREA
DO NOT WRITE IN THIS AREA
DO NOT WRITE IN THIS AREA
DO NOT WRITE IN THIS AREA

★★★★★
Join students already acing their exams.
Book your FREE lesson at www.eclassroom.org.uk

4.

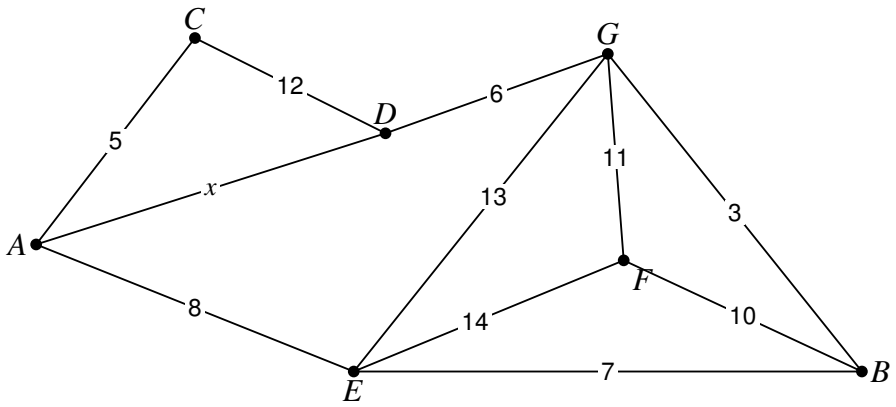

Figure 1

Figure 1 shows a network of roads. The number on each arc is the length, in km, of that road. The length of road AD is x km, where $x > 0$. The total length of the other roads is 89 km.

(a) Explain why a route that starts and finishes at A and travels along every road must repeat some roads.

(1)

A road inspector must travel along every road, starting and finishing at A. Given that $x = 20$,

(b) use the route inspection algorithm to find the length of the shortest route, stating the roads that are repeated.

(4)

(c) Find the range of values of x for which the shortest route repeats the road AD. You must make your reasoning clear.

(4)

For $x = 20$, the inspector now starts at A and may finish at any vertex.

(d) State where the inspector should finish, and the length of the shortest route.

(2)

(a) A, B, D and F have odd degree, so the network is not Eulerian. B1

(b) AD = 17 by A C D (the road AD is 20) M1 A1

AD + BF = 17 + 10 = 27 AB + DF = 15 + 17 = 32 AF + BD = 22 + 9 = 31 A1

Repeat AC, CD, BF (dashed): 89 + 20 + 27 = 136 km A1

DO NOT WRITE IN THIS AREA

Question 4 continued **D1 ANSWER BOOK**

In the exam this page is printed in the separate D1 answer book. Write your working here, on the copy provided.

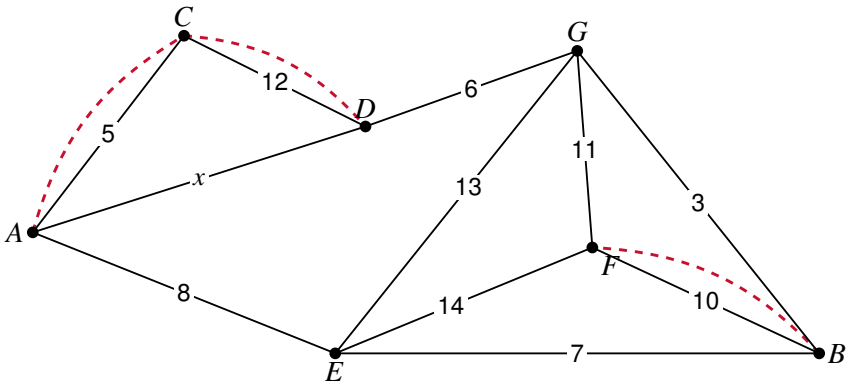

Diagram 1

(c) Shortest A to D = the smaller of x and 17 (by A C D). M1

So AD + BF ⩽ 27 < 31: this pairing is always the best. M1

The road AD is repeated only when it is the shorter way: $x < 17$ A1

$\boxed{0 < x < 17}$ (not $x < 21$: that uses x even when A C D is shorter) A1

(d) Finish B: DF 17; finish D: BF 10; finish F: BD 9 M1

Finish at $\boxed{F}$: 109 + 9 = $\boxed{118 \text{ km}}$ A1

(Total for Question 4 is 11 marks)

DO NOT WRITE IN THIS AREA

★★★★★ Join students already acing their exams.
Book your FREE lesson at www.eclassroom.org.uk

5.

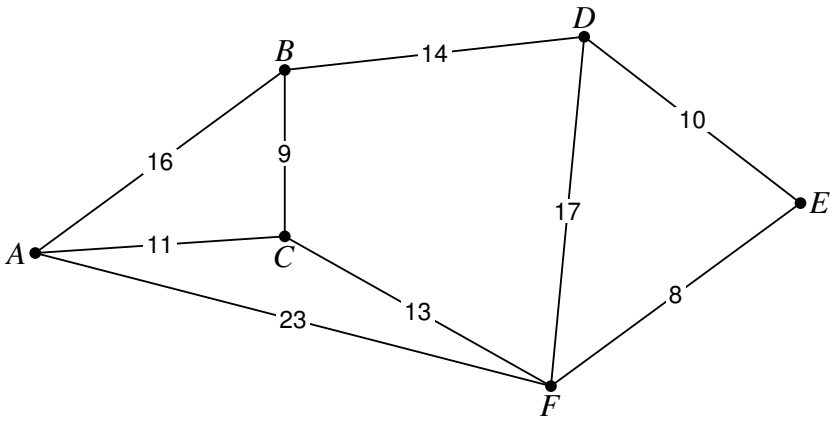

Figure 2

Figure 2 shows the roads between six towns, A to F. The number on each arc is the length, in km, of that road. A courier must visit every town, starting and finishing at the same town, and wants to travel the minimum distance.

(a) Complete the table of least distances in the answer book.

(2)

(b) Use the nearest neighbour algorithm on your table, starting first at A and then at D, to find two upper bounds for the length of the route. State each route.

(3)

(c) Write down the route that the courier would drive, in the original network, to follow your nearest neighbour route starting at D

(1)

(d) By deleting A, and then by deleting C, find two lower bounds for the length of the route. Make your method clear, and state which lower bound is better.

(3)

(e) Write down the smallest interval that must contain the length of the optimal route.

(1)

(a) AD = 30 (A B D) and CE = 21 (C F E), in the table on the next page B1 B1

DO NOT WRITE IN THIS AREA

Question 5 continued D1 ANSWER BOOK

In the exam this page is printed in the separate D1 answer book. Write your working here, on the copy provided.

	A	B	C	D	E	F
A	–	16	11	30	31	23
B	16	–	9	14	24	22
C	11	9	–	23	21	13
D	30	14	23	–	10	17
E	31	24	21	10	–	8
F	23	22	13	17	8	–

(b) From A: A C B D E F A = 11 + 9 + 14 + 10 + 8 + 23 = 75 km M1 A1

From D: D E F C B A D = 10 + 8 + 13 + 9 + 16 + 30 = 86 km A1

(c) AD in the table is the path A B D, so: D E F C B A B D B1

(d) Delete A: BC 9, CF 13, DE 10, EF 8 = 40; 40 + 11 + 16 = 67 M1

Delete C: AB 16, BD 14, DE 10, EF 8 = 48; 48 + 9 + 11 = 68 M1

The better lower bound is the larger: 68 km A1

(e) $68 \leqslant$ length $\leqslant 75$ B1

(Total for Question 5 is 10 marks)

DO NOT WRITE IN THIS AREA

★★★★★ Join students already acing their exams.
Book your FREE lesson at www.eclassroom.org.uk

6.

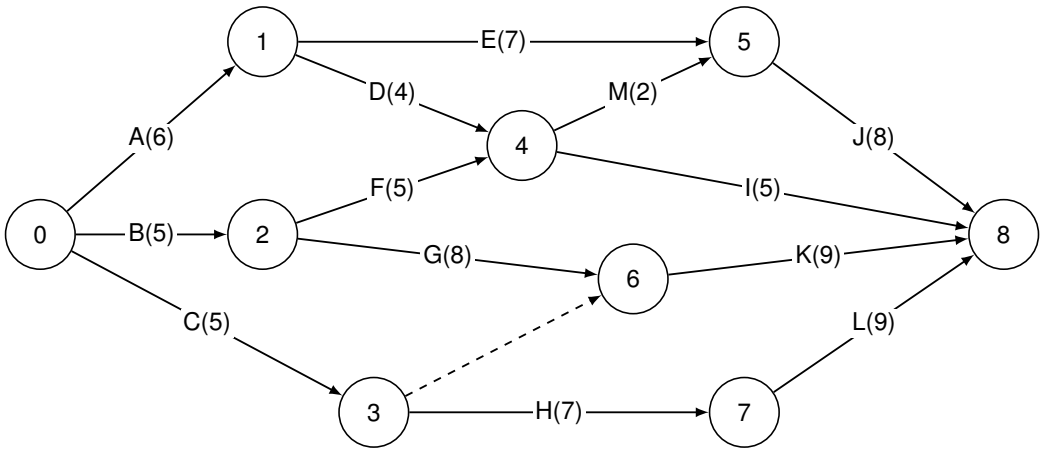

Figure 3

Figure 3 is an activity network for a project. The activities are represented by the arcs, and the number in brackets on each arc is the duration, in days, of that activity. Each activity needs one worker.

(a) Complete Diagram 2 in the answer book to show the early event times and the late event times.

(3)

(b) State the critical activities and the minimum completion time.

(1)

(c) Calculate a lower bound for the number of workers needed to complete the project in the minimum time.

(2)

(d) On the grid in the answer book, draw a cascade (Gantt) chart for the project.

(3)

(e) Show that the project cannot be completed in the minimum time by the number of workers in your answer to (c). You must refer to specific times and activities.

(2)

(a) Early and late event times on Diagram 2 (next page) M1 A1 A1

(b) Critical: B, G, K 22 days B1

(c) 80 ÷ 22 = 3.6..., round up: 4 workers M1 A1

(d) Cascade chart on Diagram 3: critical row first, floats dashed M1 A1 A1

(e) D, E, F, G and H must all be running from day 8 to day 10 (shaded) M1

Five at once, so 4 workers cannot finish the project in 22 days. A1

DO NOT WRITE IN THIS AREA
DO NOT WRITE IN THIS AREA
DO NOT WRITE IN THIS AREA
DO NOT WRITE IN THIS AREA
DO NOT WRITE IN THIS AREA
DO NOT WRITE IN THIS AREA

Question 6 continued **D1 ANSWER BOOK**

In the exam this page is printed in the separate D1 answer book. Write your working here, on the copy provided.

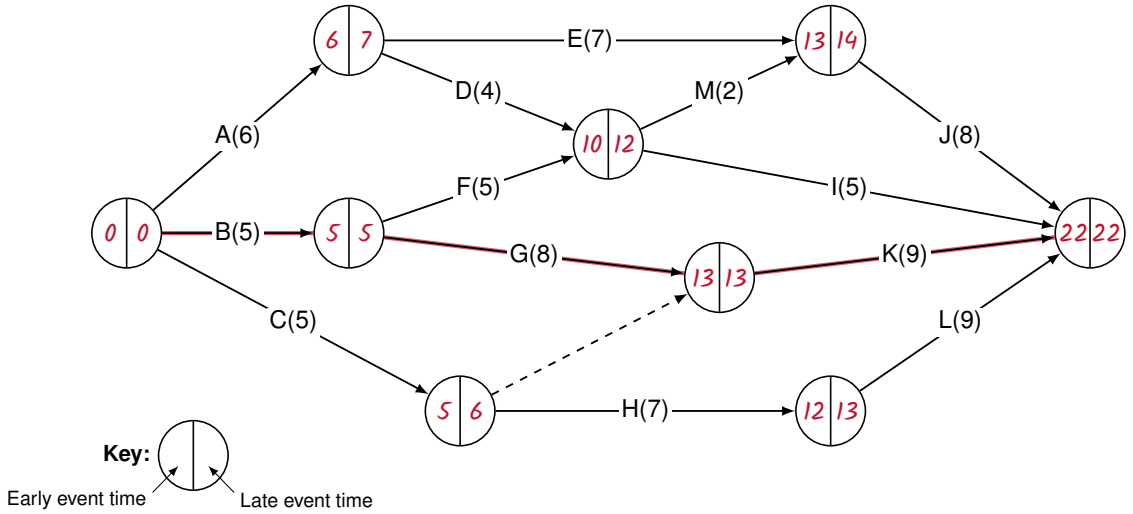

Diagram 2

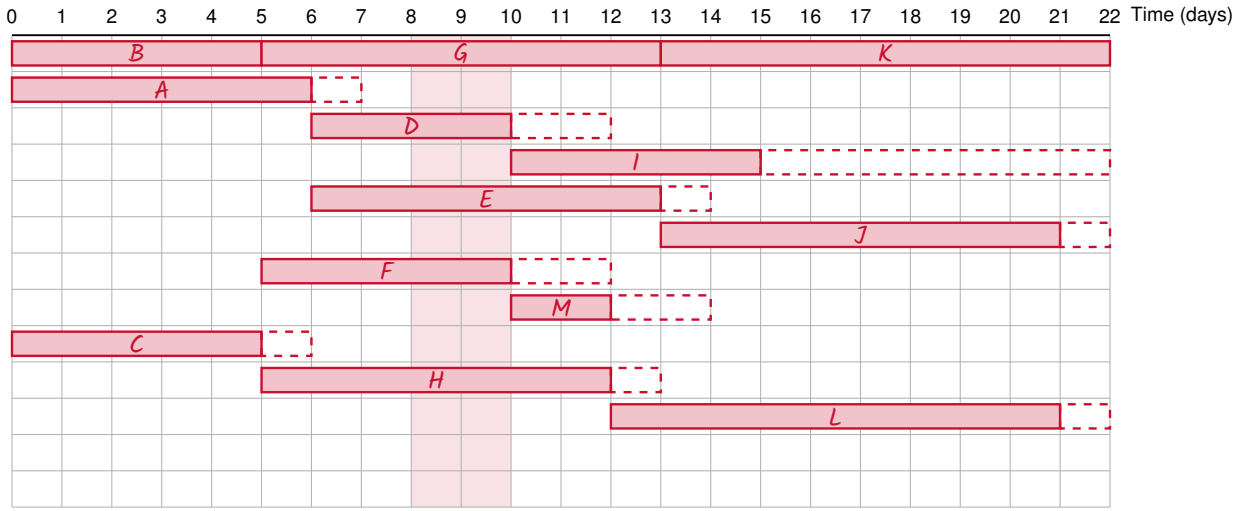

Diagram 3

D: latest start 8, finish 10 F: latest start 7, finish 10 E: 7 to 13

H: latest start 6, finish 12 G: critical, 5 to 13

(Total for Question 6 is 11 marks)

DO NOT WRITE IN THIS AREA
DO NOT WRITE IN THIS AREA
DO NOT WRITE IN THIS AREA
DO NOT WRITE IN THIS AREA
DO NOT WRITE IN THIS AREA
DO NOT WRITE IN THIS AREA

★★★★★
Join students already acing their exams.
Book your FREE lesson at www.eclassroom.org.uk

7. A bakery bakes exactly 50 trays each morning, of three kinds: x trays of croissants, y trays of muffins and z trays of bread.

- At least 5 trays of bread must be baked.
- A tray of croissants needs 2 minutes of decorating time, a tray of muffins 8 minutes and a tray of bread 3 minutes. There are 200 minutes of decorating time available.
- There must be at least as many trays of croissants as trays of bread.

The profit is £5 on a tray of croissants, £9 on a tray of muffins and £10 on a tray of bread.

(a) Explain why $x + y \leqslant 45$

(1)

(b) Show that the decorating time gives the constraint $5y - x \leqslant 50$

(2)

(c) Write the third constraint as an inequality in x and y only, with integer coefficients.

(2)

(d) Write the profit, £P, in terms of x and y only.

(2)

The lines $x + y = 45$ and $5y - x = 50$ are drawn on Diagram 4 in the answer book.

(e) Find the number of trays of each kind that the bakery should bake to maximise its profit, and state the maximum profit. You must make your method clear.

(4)

(a) $z = 50 - x - y \geqslant 5$, so $x + y \leqslant 45$ B1

(b) $2x + 8y + 3(50 - x - y) \leqslant 200$ M1

$-x + 5y + 150 \leqslant 200$, so $5y - x \leqslant 50$ A1

(c) $x \geqslant 50 - x - y$, so $\boxed{2x + y \geqslant 50}$ M1 A1

(d) $P = 5x + 9y + 10(50 - x - y) = \boxed{500 - 5x - y}$ M1 A1

DO NOT WRITE IN THIS AREA
DO NOT WRITE IN THIS AREA
DO NOT WRITE IN THIS AREA
DO NOT WRITE IN THIS AREA
DO NOT WRITE IN THIS AREA
DO NOT WRITE IN THIS AREA

Question 7 continued **D1 ANSWER BOOK**

In the exam this page is printed in the separate D1 answer book. Write your working here, on the copy provided.

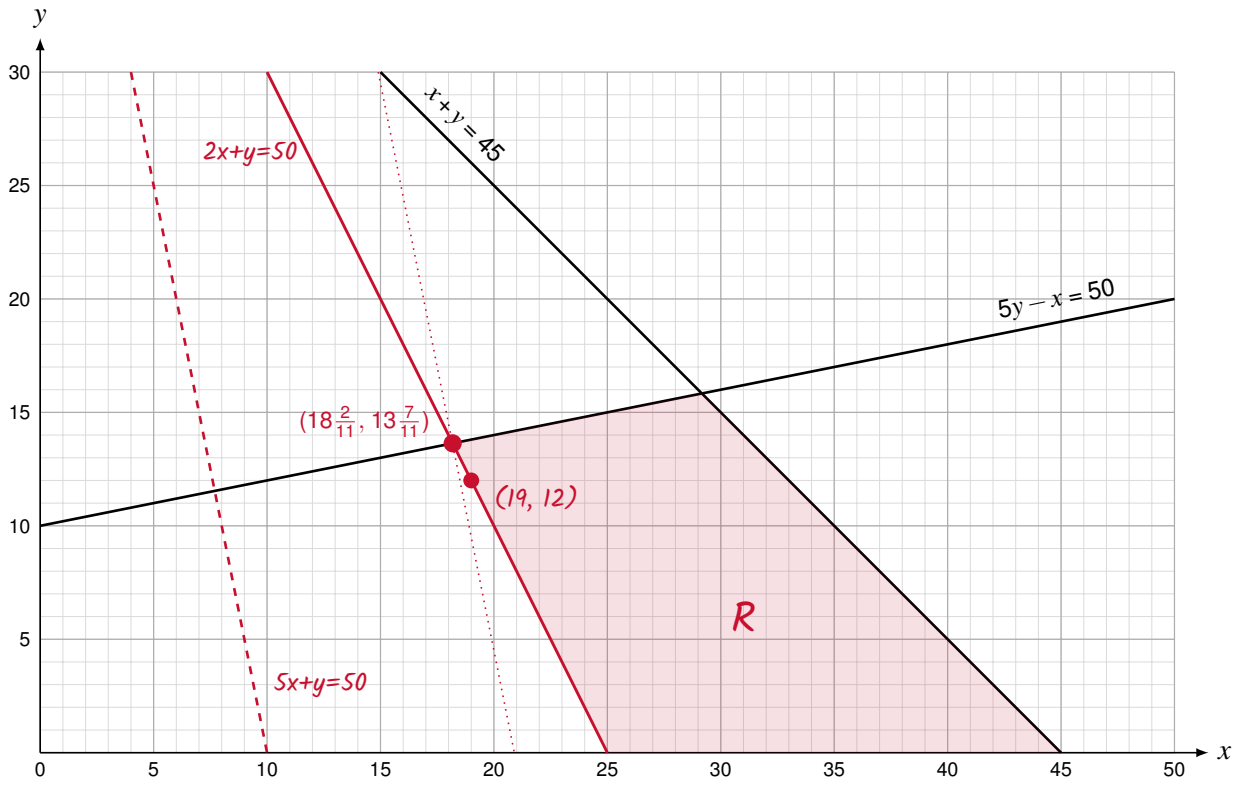

Diagram 4

(e) Line $2x + y = 50$ and the region R on Diagram 4 **M1**

Maximise P: minimise $5x + y$. $5x + y = k$ leaves R at $(18\frac{2}{11}, 13\frac{7}{11})$ **M1**

(18, 13), (18, 14), (19, 14) not feasible; (19, 13): 392; (19, 12): 393 **M1**

19 croissants, 12 muffins, 19 bread £393 **A1**

(Total for Question 7 is 11 marks)

TOTAL FOR PAPER IS 75 MARKS

END

DO NOT WRITE IN THIS AREA
DO NOT WRITE IN THIS AREA
DO NOT WRITE IN THIS AREA
DO NOT WRITE IN THIS AREA
DO NOT WRITE IN THIS AREA
DO NOT WRITE IN THIS AREA

★★★★★
Join students already acing their exams.
Book your FREE lesson at www.eclassroom.org.uk