eClassroom

INTERNATIONAL A LEVEL MATHEMATICS • DECISION 1 (WDM11)

Decision 1 Practice Paper 1

Mark Scheme

AIMING FOR B

Written in the style of the Pearson Edexcel International Advanced Level paper (WDM11/01) • 75 marks

Every question marked line by line the way an examiner marks it, with notes on the common errors

Mark every line, not just the answer. Method marks are given for a correct method even when the final answer is wrong. If you lost marks, find the *first* line where your working differs from the scheme. That is the thing to fix.

Code	Meaning
M1	Method mark: for knowing a correct method and attempting to apply it. Small slips in the working do not lose this mark.
dM1	Dependent method mark: can only be given if the method mark before it has been given.
A1	Accuracy mark: for a correct answer or line of working. It depends on the method mark before it.
B1	Independent mark: for a correct result or statement, whatever method was used.
*	The answer is given in the question. Every step must be shown, and the answer must follow from correct working (cso).
cao / cso	Correct answer only / correct solution only, with no errors anywhere in the working.
ft / oe	Follow through from your own earlier answer / or any correct equivalent form.
awrt	Answers which round to the value given, so 21.52… earns “awrt 21.5”.

How decision marks work. Decision Mathematics is a methods paper. Method marks need the algorithm to be applied in the right way and the working to be seen: the order arcs are chosen, the working values, the pivots, the bins. An answer with no working rarely earns more than one mark. Accuracy marks then need the values to be right, and a correct answer reached by the wrong algorithm earns nothing.

Rough grade guide (out of 75): A **58** • B **51** • C **44**

Based on recent WDM11 grade boundaries. Real boundaries change every series, so treat this as a guide, not a grade.

Question paper | Exam questions by topic | More practice papers

★★★★★

Join students already acing their exams.

Book your FREE lesson at www.eclassroom.org.uk

What to revise next

Write in your score for each question. Where you dropped marks, tap the chapter to practise ten more exam questions on it.

Q	What it tested	Marks	Practise it	Score
1	Bubble sort passes and a binary search on names	8	Ch 1 Algorithms	
2	Lower bound, first fit and first-fit decreasing	8	Ch 1 Algorithms	
3	Kruskal's algorithm, a distance matrix and Prim's algorithm	9	Ch 3 Algorithms on Graphs Ch 2 Graphs and Networks	
4	Dijkstra's algorithm and a route through a given vertex	9	Ch 3 Algorithms on Graphs	
5	Route inspection, then a different start and finish	10	Ch 4 Route Inspection Ch 2 Graphs and Networks	
6	Nearest neighbour upper bounds and a residual lower bound	10	Ch 5 Travelling Salesman Ch 3 Algorithms on Graphs	
7	Event times, floats, workers and a cascade chart	11	Ch 6 Critical Path Analysis	
8	Formulation and the objective line method	10	Ch 7 Linear Programming	
	Total	**75**		

Where did the marks go? If you lost the first mark of a question, the algorithm itself needs work: go back to that chapter's key skills page. If you lost the later marks, the method is right and the slip is in the detail: a pivot taken from the wrong end, a working value not replaced, an arc not returned to the start, or a float read from the wrong box. Writing every step down, in the order the algorithm makes it, stops most of these.

★★★★★

Join students already acing their exams.
Book your FREE lesson at www.eclassroom.org.uk

Question 1

8 marks

Part	Scheme	Marks
(a)	Pass 1: Farah Nadia Leila Bilal Omar Hamid Hana Karim Zainab Pass 2: Farah Leila Bilal Nadia Hamid Hana Karim Omar Zainab Pass 3: Farah Bilal Leila Hamid Hana Karim Nadia Omar Zainab Pass 4: Bilal Farah Hamid Hana Karim Leila Nadia Omar Zainab Pass 5: no swaps, so the list is in order *M1: a full first pass, with Zainab at the end. Sorting into reverse order, or a quick sort, scores M0. The final A1 needs the pass with no swaps (or a statement that there were none).*	M1 A1 A1 A1 (4)
(b)	Middle of 1 to 9 is $\lceil \frac{1+9}{2} \rceil = 5$: Karim. Hana is before Karim, so reject 5 to 9 List 1 to 4: middle $\lceil \frac{1+4}{2} \rceil = 3$: Hamid. Hana is after Hamid, so reject 1 to 3 List 4 only: middle 4 is Hana, so the name is found *The pivots must come from the sorted list and include the "reject" steps. Hamid comes before Hana because* m *comes before* n.	M1 A1 A1 (3)
(c)	4	B1 (1)
		Total for Question 1: 8 marks

Question 2

8 marks

Part	Scheme	Marks
(a)	$7+13+16+14+17+8+11+10+4+18 = 118$; $118 \div 30 = 3.93\ldots$ Lower bound 4 reels *The value must be rounded* up. *Dividing by 10, the number of pieces, scores M0.*	M1 A1 (2)
(b)	Reel 1: $A(7)$ $B(13)$ $F(8)$ Reel 2: $C(16)$ $D(14)$ Reel 3: $E(17)$ $G(11)$ Reel 4: $H(10)$ $I(4)$ Reel 5: $J(18)$ *M1: at least four pieces placed correctly. Writing running totals in place of the pieces scores M1 at most.*	M1 A1 A1 (3)
(c)	Sorted: 18, 17, 16, 14, 13, 11, 10, 8, 7, 4, and applied Reel 1: $J(18)$ $G(11)$ Reel 2: $E(17)$ $B(13)$ Reel 3: $C(16)$ $D(14)$ Reel 4: $H(10)$ $F(8)$ $A(7)$ $I(4)$ 4 reels is equal to the lower bound in (a), so the packing is optimal	M1 A1 B1 (3)
		Total for Question 2: 8 marks

Question 3

9 marks

Part	Scheme	Marks
(a)	CG 14 in, BE 15 in, CF 16 in, AD 17 in FG 18 rejected (it would make the cycle CFG), DE 19 in BD 21 rejected (cycle BDE), CE 22 in: six arcs, so the tree is complete *M1: the first four arcs in order. Each rejection must be stated. Stopping once six arcs are chosen is expected.*	M1 A1 A1 (3)
(b)	Tree with arcs AD, DE, BE, CE, CG, CF drawn 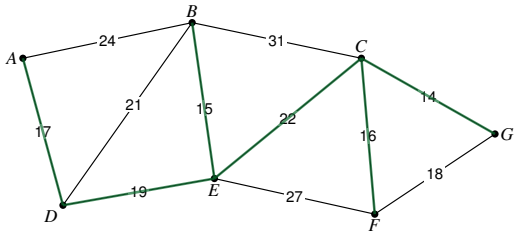 103 m	B1 B1 (2)
(c)	Row E: $-$, 15, 22, 19, $-$, 27, $-$ Column E the same, so the matrix is symmetric	B1 B1 (2)
(d)	Start at A, number the columns as they are chosen, and take the least entry in the chosen rows AD, DE, BE, CE, CG, CF *The arcs must be listed in this order. A list in Kruskal's order scores M0.*	M1 A1 (2)
		Total for Question 3: 9 marks

Question 4

9 marks

Part	Scheme	Marks
(a)	A larger working value replaced by a smaller one at least once	M1
	S: 1, 0; B: 2, 9; A: 3, 12; D: 4, 17	A1
	C: 5, 18, working values 20, 19, 18; E: 6, 29, working values 31, 29	A1
	F: 7, 31, working values 33, 31; T: 8, 39	A1
	Route $\boxed{SACET}$	A1
	Time $\boxed{39 \text{ minutes}}$	A1
	Working values must be in the order found. A missing working value or a wrong order of labelling loses the A1 for that row.	(6)
(b)	S to D is 17 (from the final value at D), and D to T is $5+11+10=26$	M1
	Route $\boxed{SBDCET}$	A1
	$\boxed{43 \text{ minutes}}$	A1
		(3)
		Total for Question 4: 9 marks

Question 5

10 marks

Part	Scheme	Marks
(a)	A, B, C and D have odd degree (3), so the network is not Eulerian	B1
		(1)
(b)	Odd vertices A, B, C, D: three pairings considered	M1
	$AB+CD=20+23=43$	A1
	$AC+BD=33+34=67$, $\quad AD+BC=27+23=50$	A1
	Repeat AF, FB, CE and ED (the least paths, not the arcs AB and CD)	A1
	$178+43=\boxed{221 \text{ m}}$	A1
	Using the direct arcs $AB=21$ and $CD=25$ gives 46: M1 A0 A1 A0 A0 at most.	(5)
(c)	$\boxed{3}$	B1
	F has degree 4, and the repeats AF and FB add 2, so its degree becomes 6.	(1)
(d)	Only the pair not containing B and the finishing vertex is repeated: finish A, $CD=23$; finish C, $AD=27$; finish D, $AC=33$	M1
	Finish at $\boxed{A}$, as CD is the shortest of these	A1
	$178+23=\boxed{201 \text{ m}}$	A1
		(3)
		Total for Question 5: 10 marks

★★★★★
Join students already acing their exams.
Book your FREE lesson at www.eclassroom.org.uk

Question 6

10 marks

Part	Scheme	Marks
(a)	$AEFCBDA$ $22+28+17+19+26+41 =$ 153 km *M1: the first three arcs correct. The return arc DA must be included.*	M1 A1 A1 (3)
(b)	$CFDBAEC$ $17+21+26+34+22+31 =$ 151 km	M1 A1 (2)
(c)	151 km, because it is the smaller (lower) of the two upper bounds	B1 (1)
(d)	Minimum spanning tree of A, C, D, E, F: CF 17, DF 21, AE 22, AC 27, total 87 $87+19+26 =$ 132 km *The two least arcs from B are $BC = 19$ and $BD = 26$.*	M1 A1 A1 (3)
(e)	$132 \leqslant$ length $\leqslant 151$ *A strict inequality at either end scores B0.*	B1 (1)
		Total for Question 6: 10 marks

★★★★★
Join students already acing their exams.
Book your FREE lesson at www.eclassroom.org.uk

Question 7

11 marks

Part	Scheme	Marks
(a)	Early event times 0, 5, 4, 7, 12, 8, 16, 22 Late event times 0, 6, 4, 11, 12, 12, 16, 22, so the project takes 22 days 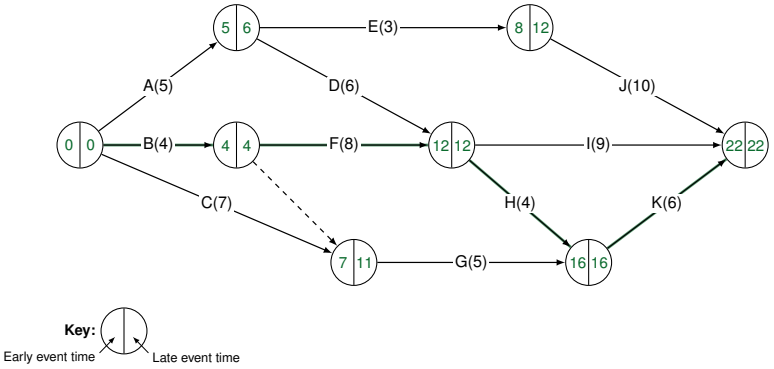 *The late time at event 4 is 12 (from H), not 13 (from I). The late time at event 2 is 4, not 11: the dummy is not the only arc leaving it.*	**M1 A1** **A1*** **(3)**
(b)	B, F, H, K	**B1** **(1)**
(c)	Total float = late finish − early start − duration: D: $12-5-6$, J: $22-8-10$ D: 1 day, J: 4 days	**M1** **A1** **(2)**
(d)	$\frac{5+4+7+6+3+8+5+4+9+10+6}{22} = \frac{67}{22} = 3.04\ldots$ 4 workers *3 workers scores A0: the bound must be rounded up.*	**M1** **A1** **(2)**
(e)	Critical activities in one row; at least six other activities with correct start times Floats shown on four non-critical activities correctly All correct: A float 1, C 4, D 1, E 4, G 4, I 1, J 4 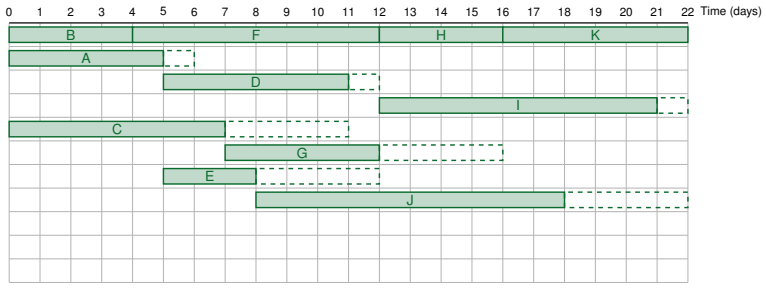 	**M1** **A1** **A1** **(3)**
		Total for Question 7: 11 marks

Question 8

10 marks

Part	Scheme	Marks
(a)	Flour, in kg: $0.4x + 0.5y \leqslant 10$ Multiply by 10: $4x + 5y \leqslant 100$	**M1** **A1*** **(2)**
(b)	$30x + 20y \leqslant 540$, so $\boxed{3x + 2y \leqslant 54}$ $y \geqslant \frac{1}{3}x$, so $\boxed{x \leqslant 3y}$ *The oven time must be in minutes (9 hours = 540 minutes). $3y \leqslant x$ is a common reversal and scores B0.*	**B1** **B1** **(2)**
(c)	Line $3x + 2y = 54$, through $(0, 27)$ and $(18, 0)$ Line $x = 3y$, through $(0, 0)$ and $(27, 9)$ Region R correct, with vertices $(0, 0)$, $(0, 20)$, $(10, 12)$, $\left(14\frac{8}{11}, 4\frac{10}{11}\right)$ 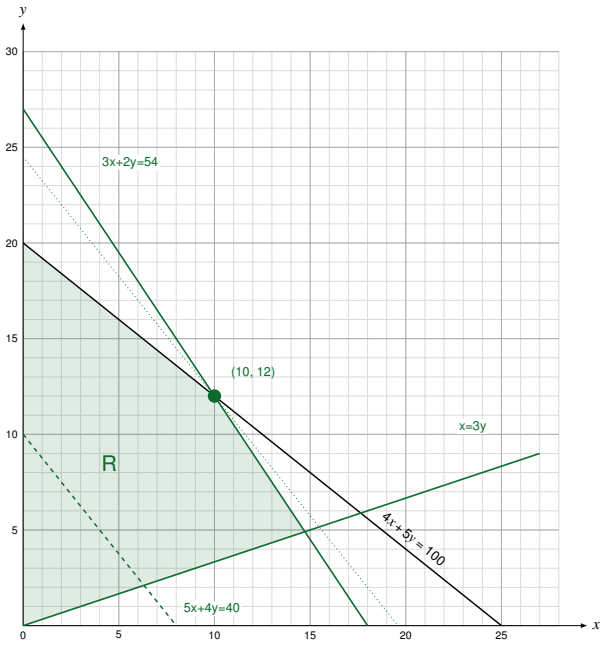 	**B1** **B1** **B1** **(3)**
(d)	Objective line $5x + 4y = k$ drawn (for example through $(8, 0)$ and $(0, 10)$) $\boxed{\text{10 trays of bread and 12 trays of cakes}}$ $\boxed{\text{£98}}$ *The optimum is where $4x + 5y = 100$ meets $3x + 2y = 54$. A vertex found by testing every vertex, with no objective line, scores M0 A1 A1.*	**M1** **A1** **A1** **(3)**
		Total for Question 8: 10 marks

TOTAL FOR PAPER: 75 MARKS