eClassroom

INTERNATIONAL A LEVEL MATHEMATICS • PURE 4 (WMA14)

Pure 4 Practice Paper 1

Edexcel IAL Pure Mathematics 4

AIMING FOR B

Written in the style of the Pearson Edexcel International Advanced Level paper (WMA14/01) • Calculator allowed

A full 75-mark paper of multi-step exam questions covering every Pure 4 chapter, with a separate mark scheme

Time	Total	You must have
1 hour 30 minutes	**75 marks**	**Mathematical Formulae and Statistical Tables, calculator**

Instructions

- Use black ink or ball-point pen. Pencil may be used for diagrams and sketches.
- Answer **all** questions, in the spaces provided.
- Show enough working to make your method clear. Answers without working may not gain full credit.
- Give inexact answers to **three significant figures** unless the question says otherwise.

Information

- There are 10 questions in this paper. The total mark is 75.
- The marks for each question are shown in brackets.

Advice

- Sit the paper in one go, in 1 hour 30 minutes, with the mark scheme closed.
- Read each question carefully and try every question. Check your answers if you have time.
- Then mark it line by line with the mark scheme and fill in your score.

Track your score

Q	Topic	Marks	Score
1	Partial fractions and binomial series	8	
2	Proof by contradiction	7	
3	A parametric curve that crosses itself	7	
4	Implicit differentiation	7	
5	Integration by parts and a volume	8	
6	Connected rates of change	7	
7	A separable differential equation	8	
8	Integration by substitution and area	7	
9	Vector equations of lines	8	
10	A rumour model	8	
	Total	**75**	

Rough grade guide (out of 75): A* **66** • A **59** • B **51** • C **43**

Based on recent WMA14 grade boundaries. Real boundaries change every series, so treat this as a guide, not a grade.

Mark scheme | Exam questions by topic | More practice papers

Name ..... Date .....

★★★★★

Join students already acing their exams.

Book your FREE lesson at www.eclassroom.org.uk

1. In this question you must show all stages of your working.

Solutions relying on calculator technology are not acceptable.

$$f(x) = \frac{x+8}{(1-x)(2+x)^2}$$

(a) Express $f(x)$ in partial fractions.

(4)

(b) Hence find the series expansion of $f(x)$, in ascending powers of x, up to and including the term in x^2. Give each coefficient as a simplified fraction.

(3)

(c) State the range of values of x for which your expansion is valid.

(1)

DO NOT WRITE IN THIS AREA

DO NOT WRITE IN THIS AREA

DO NOT WRITE IN THIS AREA

DO NOT WRITE IN THIS AREA

DO NOT WRITE IN THIS AREA

DO NOT WRITE IN THIS AREA

Question 1 continued

DO NOT WRITE IN THIS AREA
DO NOT WRITE IN THIS AREA
DO NOT WRITE IN THIS AREA
DO NOT WRITE IN THIS AREA
DO NOT WRITE IN THIS AREA
DO NOT WRITE IN THIS AREA

(Total for Question 1 is 8 marks)

★★★★★
Join students already acing their exams.
Book your FREE lesson at www.eclassroom.org.uk

2. **(a)** Prove by contradiction that $\log_2 3$ is irrational.

(4)

(b) Prove by contradiction that there are no integers a and b such that

$$6a + 15b = 2$$

(3)

DO NOT WRITE IN THIS AREA
DO NOT WRITE IN THIS AREA
DO NOT WRITE IN THIS AREA
DO NOT WRITE IN THIS AREA
DO NOT WRITE IN THIS AREA
DO NOT WRITE IN THIS AREA

Question 2 continued

DO NOT WRITE IN THIS AREA
DO NOT WRITE IN THIS AREA
DO NOT WRITE IN THIS AREA
DO NOT WRITE IN THIS AREA
DO NOT WRITE IN THIS AREA
DO NOT WRITE IN THIS AREA

(Total for Question 2 is 7 marks)

★★★★★
Join students already acing their exams.
Book your FREE lesson at www.eclassroom.org.uk

3.

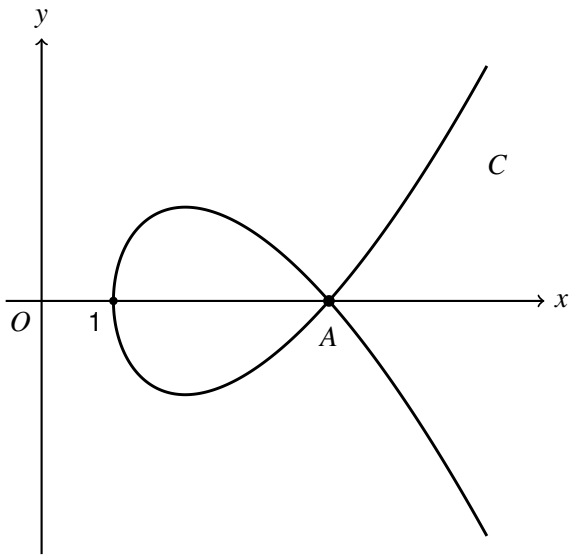

Figure 1

Figure 1 shows the curve C with parametric equations

$$x = t^2 + 1, \qquad y = t^3 - 3t \qquad t \in \mathbb{R}$$

The curve crosses itself at the point $A(4, 0)$.

(a) Show that C passes through A for two different values of t.

(2)

(b) Find the gradient of each of the two tangents to C at A.

(3)

(c) Show that a Cartesian equation of C is

$$y^2 = (x - 1)(x - 4)^2$$

(2)

DO NOT WRITE IN THIS AREA

Question 3 continued

DO NOT WRITE IN THIS AREA
DO NOT WRITE IN THIS AREA
DO NOT WRITE IN THIS AREA
DO NOT WRITE IN THIS AREA
DO NOT WRITE IN THIS AREA
DO NOT WRITE IN THIS AREA

(Total for Question 3 is 7 marks)

★★★★★
Join students already acing their exams.
Book your FREE lesson at www.eclassroom.org.uk

4. The curve C has equation

$$x^2 + xy + y^2 = 12$$

(a) Find $\frac{dy}{dx}$ in terms of x and y.

(4)

(b) Find the coordinates of the points on C at which the tangent to C is parallel to the x-axis.

(3)

DO NOT WRITE IN THIS AREA
DO NOT WRITE IN THIS AREA
DO NOT WRITE IN THIS AREA
DO NOT WRITE IN THIS AREA
DO NOT WRITE IN THIS AREA
DO NOT WRITE IN THIS AREA

Question 4 continued

DO NOT WRITE IN THIS AREA
DO NOT WRITE IN THIS AREA
DO NOT WRITE IN THIS AREA
DO NOT WRITE IN THIS AREA
DO NOT WRITE IN THIS AREA
DO NOT WRITE IN THIS AREA

(Total for Question 4 is 7 marks)

★★★★★
Join students already acing their exams.
Book your FREE lesson at www.eclassroom.org.uk

5. In this question you must show all stages of your working.

Solutions relying on calculator technology are not acceptable.

(a) Find $\int x\mathrm{e}^{-x}\,\mathrm{d}x$

(3)

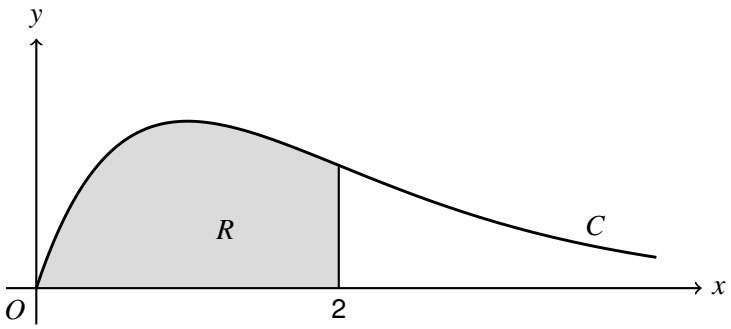

Figure 2

Figure 2 shows part of the curve C with equation $y = x\mathrm{e}^{-x}$, $x \geqslant 0$

The region R, shown shaded in Figure 2, is bounded by C, the x-axis and the line $x = 2$

The region R is rotated through 2π radians about the x-axis to form a solid of revolution.

(b) Use integration to show that the volume of the solid is

$$\frac{\pi}{4}\left(1 - 13\mathrm{e}^{-4}\right)$$

(5)

DO NOT WRITE IN THIS AREA

Question 5 continued

DO NOT WRITE IN THIS AREA
DO NOT WRITE IN THIS AREA
DO NOT WRITE IN THIS AREA
DO NOT WRITE IN THIS AREA
DO NOT WRITE IN THIS AREA
DO NOT WRITE IN THIS AREA

(Total for Question 5 is 8 marks)

★★★★★
Join students already acing their exams.
Book your FREE lesson at www.eclassroom.org.uk

6.

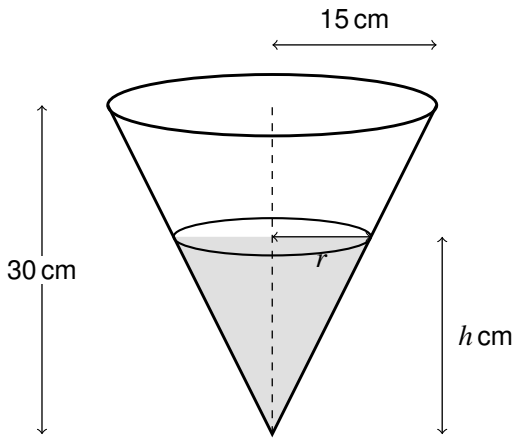

Figure 3

Figure 3 shows a funnel in the shape of a right circular cone, held with its vertex pointing down. The cone has height 30 cm and its top has radius 15 cm.

When the depth of water in the funnel is h cm, the surface of the water is a circle of radius r cm and the volume of water is V cm^3.

(a) Show that $V = \dfrac{\pi h^3}{12}$

(2)

Water drips out of the funnel at a constant rate of 3 cm^3 s^{-1}.

(b) Find, in terms of π, the rate at which the depth of the water is falling at the instant when $h = 6$

(3)

(c) Find, in terms of π, the rate at which the radius of the water surface is decreasing at this instant.

(2)

DO NOT WRITE IN THIS AREA

Question 6 continued

DO NOT WRITE IN THIS AREA
DO NOT WRITE IN THIS AREA
DO NOT WRITE IN THIS AREA
DO NOT WRITE IN THIS AREA
DO NOT WRITE IN THIS AREA
DO NOT WRITE IN THIS AREA

(Total for Question 6 is 7 marks)

★★★★★
Join students already acing their exams.
Book your FREE lesson at www.eclassroom.org.uk

7. In this question you must show all stages of your working.

Solutions relying on calculator technology are not acceptable.

(a) Find $\int x\mathrm{e}^{2x}\,\mathrm{d}x$

(3)

(b) Given that $y = -2$ when $x = 0$, solve the differential equation

$$\frac{\mathrm{d}y}{\mathrm{d}x} = x\mathrm{e}^{2x}(y+3)^2$$

showing that the solution is

$$y = -3 + \frac{4}{3 + (1-2x)\mathrm{e}^{2x}}$$

(5)

DO NOT WRITE IN THIS AREA

Question 7 continued

DO NOT WRITE IN THIS AREA
DO NOT WRITE IN THIS AREA
DO NOT WRITE IN THIS AREA
DO NOT WRITE IN THIS AREA
DO NOT WRITE IN THIS AREA
DO NOT WRITE IN THIS AREA

(Total for Question 7 is 8 marks)

★★★★★
Join students already acing their exams.
Book your FREE lesson at www.eclassroom.org.uk

8. In this question you must show all stages of your working.

Solutions relying on calculator technology are not acceptable.

(a) Use the substitution $u = e^x + 1$ to show that

$$\int \frac{e^{2x}}{e^x + 1}\,dx = e^x - \ln\left(e^x + 1\right) + c$$

where c is an arbitrary constant.

(4)

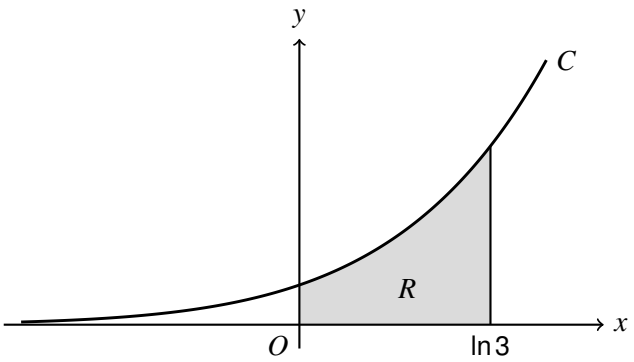

Figure 4

Figure 4 shows part of the curve C with equation $y = \dfrac{e^{2x}}{e^x + 1}$

The region R, shown shaded in Figure 4, is bounded by C, the coordinate axes and the line $x = \ln 3$

(b) Find the exact area of R, giving your answer in the form $a + \ln b$, where a and b are rational constants.

(3)

DO NOT WRITE IN THIS AREA

Question 8 continued

DO NOT WRITE IN THIS AREA
DO NOT WRITE IN THIS AREA
DO NOT WRITE IN THIS AREA
DO NOT WRITE IN THIS AREA
DO NOT WRITE IN THIS AREA
DO NOT WRITE IN THIS AREA

(Total for Question 8 is 7 marks)

★★★★★
Join students already acing their exams.
Book your FREE lesson at www.eclassroom.org.uk

9. The lines l_1 and l_2 have equations

$$l_1 : \mathbf{r} = \begin{pmatrix} 1 \\ 2 \\ -1 \end{pmatrix} + \lambda \begin{pmatrix} 2 \\ -1 \\ 3 \end{pmatrix} \qquad l_2 : \mathbf{r} = \begin{pmatrix} 5 \\ 3 \\ -2 \end{pmatrix} + \mu \begin{pmatrix} 1 \\ 1 \\ -2 \end{pmatrix}$$

where λ and μ are scalar parameters.

(a) Show that l_1 and l_2 meet, and find the coordinates of their point of intersection P.

(4)

(b) Find the acute angle between l_1 and l_2, giving your answer in degrees to one decimal place.

(2)

The point $A(1, 2, -1)$ lies on l_1

The point B, where B is not P, lies on l_2 and is such that $AB = AP$

(c) Find the coordinates of B.

(2)

DO NOT WRITE IN THIS AREA

DO NOT WRITE IN THIS AREA

DO NOT WRITE IN THIS AREA

DO NOT WRITE IN THIS AREA

DO NOT WRITE IN THIS AREA

DO NOT WRITE IN THIS AREA

Question 9 continued

DO NOT WRITE IN THIS AREA
DO NOT WRITE IN THIS AREA
DO NOT WRITE IN THIS AREA
DO NOT WRITE IN THIS AREA
DO NOT WRITE IN THIS AREA
DO NOT WRITE IN THIS AREA

(Total for Question 9 is 8 marks)

★★★★★
Join students already acing their exams.
Book your FREE lesson at www.eclassroom.org.uk

10. A rumour spreads through a town. The number of people who have heard the rumour, P thousand, t days after it starts, is modelled by the differential equation

$$\frac{dP}{dt} = \frac{P(4-P)}{8} \qquad t \geqslant 0,\ 0 < P < 4$$

Initially 1000 people have heard the rumour.

(a) Express $\frac{1}{P(4-P)}$ in partial fractions.

(2)

(b) Solve the differential equation to show that

$$P = \frac{4}{1+3e^{-\frac{1}{2}t}}$$

(5)

(c) Sketch the graph of P against t, showing the value of P when $t = 0$ and the equation of the asymptote.

(1)

DO NOT WRITE IN THIS AREA

Question 10 continued

DO NOT WRITE IN THIS AREA
DO NOT WRITE IN THIS AREA
DO NOT WRITE IN THIS AREA
DO NOT WRITE IN THIS AREA
DO NOT WRITE IN THIS AREA
DO NOT WRITE IN THIS AREA

(Total for Question 10 is 8 marks)

TOTAL FOR PAPER IS 75 MARKS

END

★★★★★
Join students already acing their exams.
Book your FREE lesson at www.eclassroom.org.uk