eClassroom

INTERNATIONAL A LEVEL MATHEMATICS • DECISION 1 (WDM11)

Decision 1 Practice Paper 3

Edexcel IAL Decision 1

AIMING FOR A/A*

Written in the style of the Pearson Edexcel International Advanced Level paper (WDM11/01) • Calculator allowed

A full 75-mark paper set above the hardest recent series: long questions, no route given and a trap in every question

Time	Total	You must have
1 hour 30 minutes	**75 marks**	**Calculator. The answer-book pages follow each question**

Instructions

- Use black ink or ball-point pen. Pencil may be used for diagrams and sketches.
- Answer **all** questions. Use the **D1 ANSWER BOOK** pages as the answer book.
- Show enough working to make your method clear. Answers without working may not gain full credit.
- Give inexact answers to **three significant figures** unless the question says otherwise.

Information

- There are 7 questions in this paper. The total mark is 75.
- The marks for each question are shown in brackets.

Advice

- Sit the paper in one go, in 1 hour 30 minutes, with the mark scheme closed.
- Read each question carefully and try every question. Check your answers if you have time.
- Then mark it line by line with the mark scheme and fill in your score.

Track your score

Q	Topic	Marks	Score
1	Sorting and searching with unknowns	10	
2	Bin packing and full bins	11	
3	Degrees and a tree with a required arc	11	
4	Route inspection with an unknown arc	11	
5	A practical travelling salesman problem	10	
6	Critical path analysis and workers	11	
7	Linear programming in three variables	11	
	Total	**75**	

Rough grade guide (out of 75): A **47** • B **40** • C **33**

Based on recent WDM11 grade boundaries. Real boundaries change every series, so treat this as a guide, not a grade.

Mark scheme | Exam questions by topic | More practice papers

Name ..... Date .....

★★★★★

Join students already acing their exams.

Book your FREE lesson at www.eclassroom.org.uk

1. **(i)** A bubble sort is used to put the list below into ascending order, where k is an integer that is different from each of the other numbers in the list.

14	8	21	k	17	11

After the second pass of the bubble sort, the list is

8 14 17 11 k 21

(a) Find the possible values of k. You must make your reasoning clear.

(4)

(b) Taking $k = 19$, complete the bubble sort, giving the state of the list after each further pass.

(2)

(ii) The list below is in ascending order and contains eleven different integers. The value n is unknown.

1	2	3	4	5	6	7	8	9	10	11
12	19	23	31	38	n	47	52	58	64	71

The binary search algorithm is used to search the list for the number 44. The number 44 is compared with exactly three items in the list, and the search ends with 44 not being found.

(c) Find the possible values of n. You must make your method clear.

(4)

DO NOT WRITE IN THIS AREA

Question 1 continued **D1 ANSWER BOOK**

In the exam this page is printed in the separate D1 answer book. Write your working here, on the copy provided.

14	8	21	k	17	11

1	2	3	4	5	6	7	8	9	10	11
12	19	23	31	38	n	47	52	58	64	71

DO NOT WRITE IN THIS AREA

(Total for Question 1 is 10 marks)

★★★★★
Join students already acing their exams.
Book your FREE lesson at www.eclassroom.org.uk

2. A plumber needs ten lengths of pipe, in cm, as listed below. Each length is cut from a 40 cm section, and the plumber wants to use as few sections as possible.

22	10	20	17	21	8	15	12	11	19

(a) Calculate a lower bound for the number of sections needed.

(2)

(b) Use the first-fit decreasing bin packing algorithm to allocate the lengths to sections.

(3)

(c) Show that the lengths can be cut from fewer sections than your answer to (b), and explain why your new allocation is optimal.

(3)

An eleventh length of pipe, y cm, is also needed, where y is an integer.

(d) Find the greatest value of y for which all eleven lengths can still be cut from the number of sections in your answer to (c). Justify your answer.

(3)

DO NOT WRITE IN THIS AREA
DO NOT WRITE IN THIS AREA
DO NOT WRITE IN THIS AREA
DO NOT WRITE IN THIS AREA
DO NOT WRITE IN THIS AREA
DO NOT WRITE IN THIS AREA

★★★★★
Join students already acing their exams.
Book your FREE lesson at www.eclassroom.org.uk

Question 2 continued **D1 ANSWER BOOK**

In the exam this page is printed in the separate D1 answer book. Write your working here, on the copy provided.

22	10	20	17	21	8	15	12	11	19

DO NOT WRITE IN THIS AREA
DO NOT WRITE IN THIS AREA
DO NOT WRITE IN THIS AREA
DO NOT WRITE IN THIS AREA
DO NOT WRITE IN THIS AREA
DO NOT WRITE IN THIS AREA

(Total for Question 2 is 11 marks)

★★★★★
Join students already acing their exams.
Book your FREE lesson at www.eclassroom.org.uk

3. **(i)** A simple connected graph has six vertices. Five of the vertices have degrees 1, 2, 2, 3 and 3, and the sixth vertex has degree d

(a) Explain why d must be odd.

(1)

(b) Given that the graph has 7 arcs, find d

(2)

(c) Determine whether the graph is Eulerian, semi-Eulerian or neither. Give a reason for your answer.

(1)

(ii) The distance matrix shows the lengths, in km, of possible pipelines between six sites, A to F

	A	B	C	D	E	F
A	–	26	18	31	22	35
B	26	–	14	28	39	17
C	18	14	–	21	30	25
D	31	28	21	–	16	33
E	22	39	30	16	–	29
F	35	17	25	33	29	–

(d) Use Prim's algorithm, starting at A, to find a minimum spanning tree. State the order in which you select the arcs and the weight of the tree.

(3)

The pipeline BE must be built.

(e) Find the minimum total length of a network that connects all six sites and includes BE, and state the arcs it uses.

(3)

(f) Explain how your answer to (e) could be found directly from your tree in (d).

(1)

DO NOT WRITE IN THIS AREA

Question 3 continued D1 ANSWER BOOK

In the exam this page is printed in the separate D1 answer book. Write your working here, on the copy provided.

	A	B	C	D	E	F
A	–	26	18	31	22	35
B	26	–	14	28	39	17
C	18	14	–	21	30	25
D	31	28	21	–	16	33
E	22	39	30	16	–	29
F	35	17	25	33	29	–

Copy for part (e)

	A	B	C	D	E	F
A	–	26	18	31	22	35
B	26	–	14	28	39	17
C	18	14	–	21	30	25
D	31	28	21	–	16	33
E	22	39	30	16	–	29
F	35	17	25	33	29	–

(Total for Question 3 is 11 marks)

DO NOT WRITE IN THIS AREA
DO NOT WRITE IN THIS AREA
DO NOT WRITE IN THIS AREA
DO NOT WRITE IN THIS AREA
DO NOT WRITE IN THIS AREA
DO NOT WRITE IN THIS AREA

★★★★★
Join students already acing their exams.
Book your FREE lesson at www.eclassroom.org.uk

4.

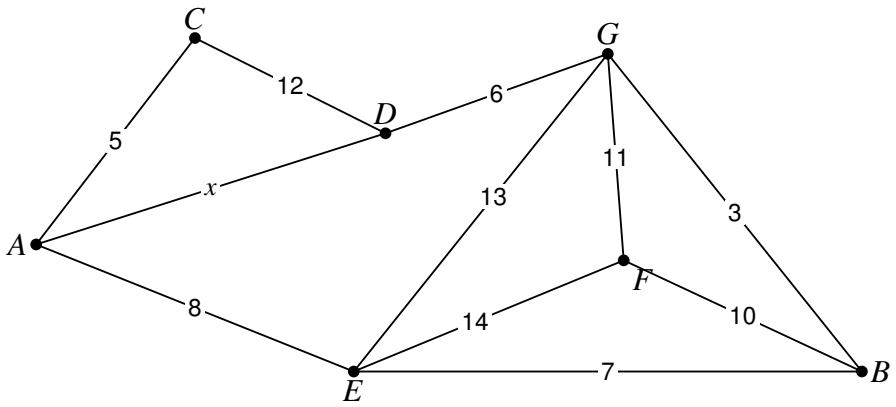

Figure 1

Figure 1 shows a network of roads. The number on each arc is the length, in km, of that road. The length of road AD is x km, where $x > 0$. The total length of the other roads is 89 km.

(a) Explain why a route that starts and finishes at A and travels along every road must repeat some roads.

(1)

A road inspector must travel along every road, starting and finishing at A. Given that $x = 20$,

(b) use the route inspection algorithm to find the length of the shortest route, stating the roads that are repeated.

(4)

(c) Find the range of values of x for which the shortest route repeats the road AD. You must make your reasoning clear.

(4)

For $x = 20$, the inspector now starts at A and may finish at any vertex.

(d) State where the inspector should finish, and the length of the shortest route.

(2)

DO NOT WRITE IN THIS AREA

Question 4 continued **D1 ANSWER BOOK**

In the exam this page is printed in the separate D1 answer book. Write your working here, on the copy provided.

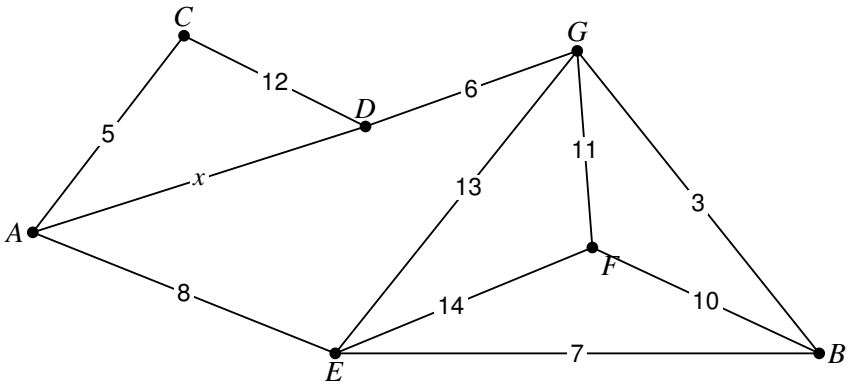

Diagram 1

(Total for Question 4 is 11 marks)

DO NOT WRITE IN THIS AREA
DO NOT WRITE IN THIS AREA
DO NOT WRITE IN THIS AREA
DO NOT WRITE IN THIS AREA
DO NOT WRITE IN THIS AREA
DO NOT WRITE IN THIS AREA

★★★★★
Join students already acing their exams.
Book your FREE lesson at **www.eclassroom.org.uk**

5.

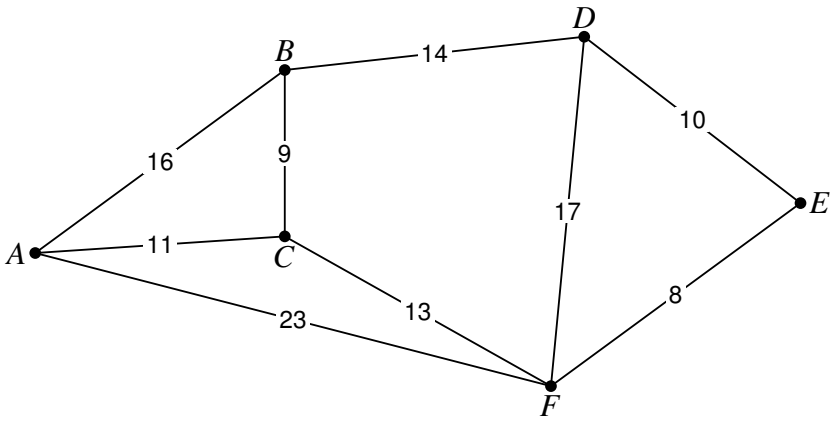

Figure 2

Figure 2 shows the roads between six towns, A to F. The number on each arc is the length, in km, of that road. A courier must visit every town, starting and finishing at the same town, and wants to travel the minimum distance.

(a) Complete the table of least distances in the answer book.

(2)

(b) Use the nearest neighbour algorithm on your table, starting first at A and then at D, to find two upper bounds for the length of the route. State each route.

(3)

(c) Write down the route that the courier would drive, in the original network, to follow your nearest neighbour route starting at D

(1)

(d) By deleting A, and then by deleting C, find two lower bounds for the length of the route. Make your method clear, and state which lower bound is better.

(3)

(e) Write down the smallest interval that must contain the length of the optimal route.

(1)

DO NOT WRITE IN THIS AREA

Question 5 continued **D1 ANSWER BOOK**

In the exam this page is printed in the separate D1 answer book. Write your working here, on the copy provided.

	A	B	C	D	E	F
A	–	16	11		31	23
B	16	–	9	14	24	22
C	11	9	–	23		13
D		14	23	–	10	17
E	31	24		10	–	8
F	23	22	13	17	8	–

DO NOT WRITE IN THIS AREA

(Total for Question 5 is 10 marks)

★★★★★
Join students already acing their exams.
Book your FREE lesson at www.eclassroom.org.uk

6.

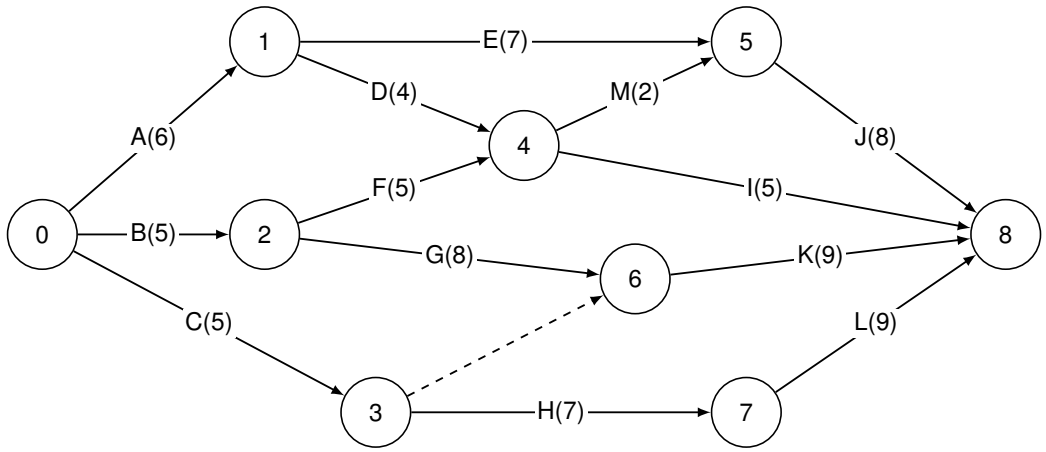

Figure 3

Figure 3 is an activity network for a project. The activities are represented by the arcs, and the number in brackets on each arc is the duration, in days, of that activity. Each activity needs one worker.

(a) Complete Diagram 2 in the answer book to show the early event times and the late event times.

(3)

(b) State the critical activities and the minimum completion time.

(1)

(c) Calculate a lower bound for the number of workers needed to complete the project in the minimum time.

(2)

(d) On the grid in the answer book, draw a cascade (Gantt) chart for the project.

(3)

(e) Show that the project cannot be completed in the minimum time by the number of workers in your answer to (c). You must refer to specific times and activities.

(2)

DO NOT WRITE IN THIS AREA
DO NOT WRITE IN THIS AREA
DO NOT WRITE IN THIS AREA
DO NOT WRITE IN THIS AREA
DO NOT WRITE IN THIS AREA
DO NOT WRITE IN THIS AREA

★★★★★
Join students already acing their exams.
Book your FREE lesson at www.eclassroom.org.uk

Question 6 continued **D1 ANSWER BOOK**

In the exam this page is printed in the separate D1 answer book. Write your working here, on the copy provided.

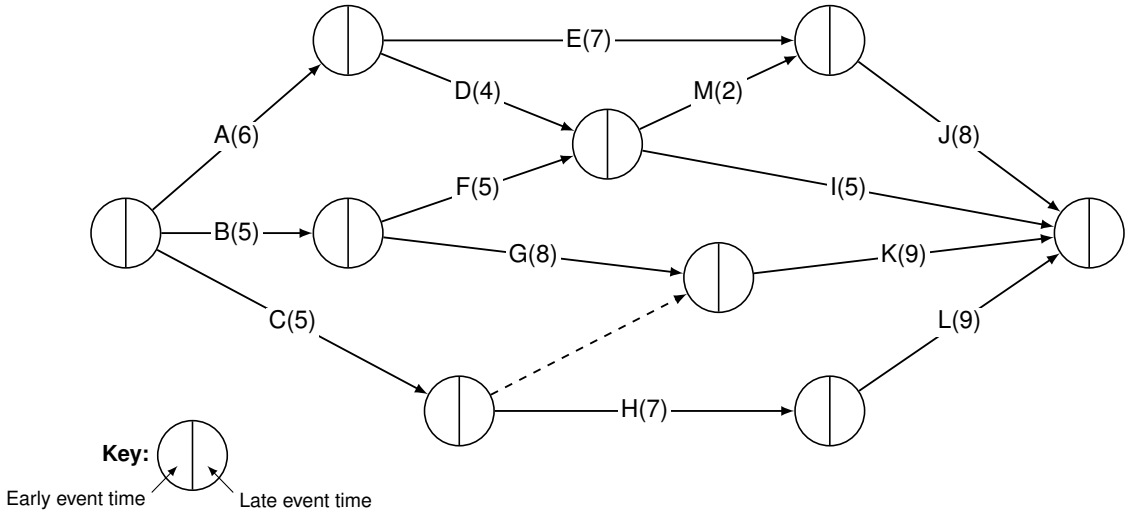

Diagram 2

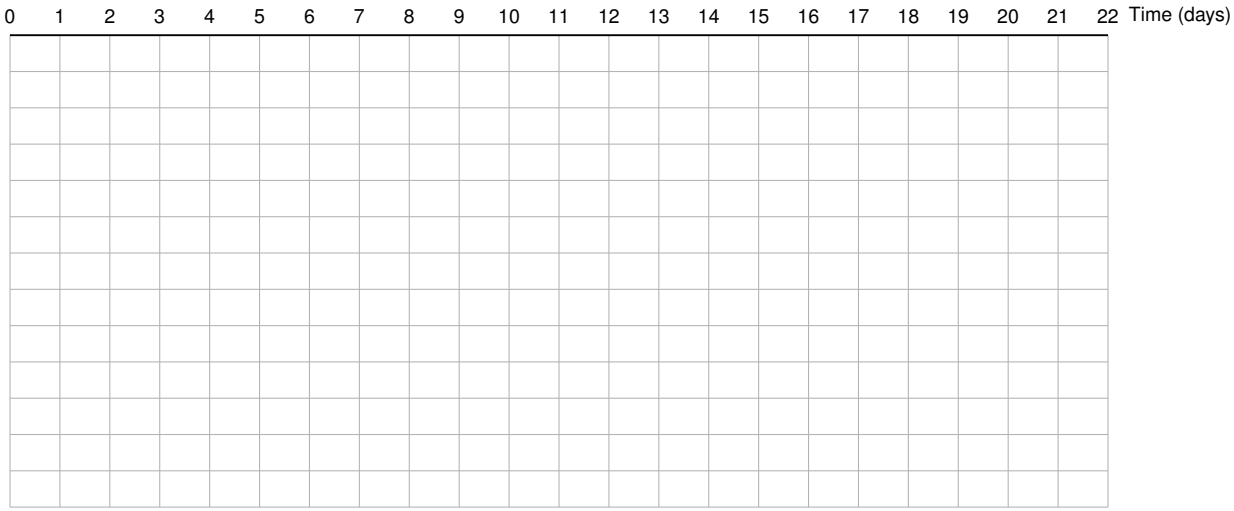

Diagram 3

(Total for Question 6 is 11 marks)

DO NOT WRITE IN THIS AREA
DO NOT WRITE IN THIS AREA
DO NOT WRITE IN THIS AREA
DO NOT WRITE IN THIS AREA
DO NOT WRITE IN THIS AREA
DO NOT WRITE IN THIS AREA

★★★★★
Join students already acing their exams.
Book your FREE lesson at **www.eclassroom.org.uk**

7. A bakery bakes exactly 50 trays each morning, of three kinds: x trays of croissants, y trays of muffins and z trays of bread.

- At least 5 trays of bread must be baked.
- A tray of croissants needs 2 minutes of decorating time, a tray of muffins 8 minutes and a tray of bread 3 minutes. There are 200 minutes of decorating time available.
- There must be at least as many trays of croissants as trays of bread.

The profit is £5 on a tray of croissants, £9 on a tray of muffins and £10 on a tray of bread.

(a) Explain why $x + y \leqslant 45$

(1)

(b) Show that the decorating time gives the constraint $5y - x \leqslant 50$

(2)

(c) Write the third constraint as an inequality in x and y only, with integer coefficients.

(2)

(d) Write the profit, £P, in terms of x and y only.

(2)

The lines $x + y = 45$ and $5y - x = 50$ are drawn on Diagram 4 in the answer book.

(e) Find the number of trays of each kind that the bakery should bake to maximise its profit, and state the maximum profit. You must make your method clear.

(4)

DO NOT WRITE IN THIS AREA

★★★★★ Join students already acing their exams.
Book your FREE lesson at www.eclassroom.org.uk

Question 7 continued D1 ANSWER BOOK

In the exam this page is printed in the separate D1 answer book. Write your working here, on the copy provided.

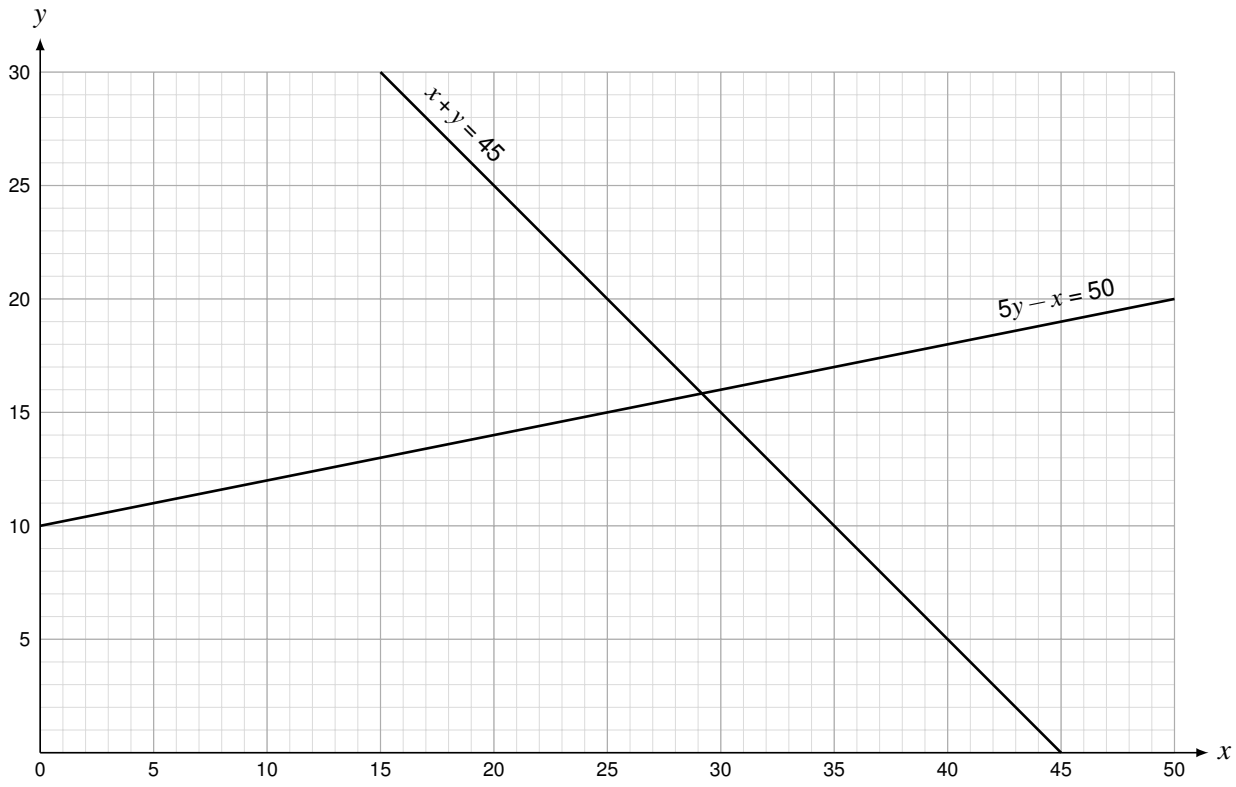

Diagram 4

(Total for Question 7 is 11 marks)

TOTAL FOR PAPER IS 75 MARKS

END

DO NOT WRITE IN THIS AREA
DO NOT WRITE IN THIS AREA
DO NOT WRITE IN THIS AREA
DO NOT WRITE IN THIS AREA
DO NOT WRITE IN THIS AREA
DO NOT WRITE IN THIS AREA

★★★★★
Join students already acing their exams.
Book your FREE lesson at www.eclassroom.org.uk