eClassroom

INTERNATIONAL A LEVEL MATHEMATICS • DECISION 1 (WDM11)

Decision 1 Practice Paper 1

Worked Solutions

AIMING FOR B

Written in the style of the Pearson Edexcel International Advanced Level paper (WDM11/01) • 75 marks

Every question solved in full on the paper itself, the way your teacher would write it out

How to read these solutions. Each page is the real question page, with a full answer written on the answer lines.

Red pen

M1 A1

boxed

the working a full-marks answer shows, with a short note on why each step is taken

the mark earned on that line: M = method, A = accuracy, B = independent mark

the final answer to each part

Sit the paper first. These solutions are most useful after you have tried every question yourself under timed conditions. Mark your paper with the mark scheme, then use this booklet to see exactly how each lost mark could have been earned.

Q	Topic	Marks	Page
1	Bubble sort and binary search	8	2
2	Bin packing	8	3
3	Kruskal's and Prim's algorithms	9	4
4	Dijkstra's algorithm	9	6
5	Route inspection	10	8
6	The travelling salesman problem	10	10
7	Critical path analysis	11	11
8	Linear programming	10	13

Question paper & mark scheme | Exam questions by topic | More practice papers

★★★★★

Join students already acing their exams.

Book your FREE lesson at www.eclassroom.org.uk

1. The names of nine students are listed below.

Nadia Farah Omar Leila Bilal Zainab Hamid Hana Karim

(a) Use a bubble sort to put the names into alphabetical order. You need only give the state of the list after each pass.

(4)

(b) Use the binary search algorithm on your sorted list to locate the name Hana. You must make your method clear.

(3)

(c) Write down the maximum number of iterations the binary search algorithm needs to locate any name in a list of nine names.

(1)

(a) Pass 1: Farah Nadia Leila Bilal Omar Hamid Hana Karim Zainab M1 A1

Pass 2: Farah Leila Bilal Nadia Hamid Hana Karim Omar Zainab A1

Pass 3: Farah Bilal Leila Hamid Hana Karim Nadia Omar Zainab

Pass 4: Bilal Farah Hamid Hana Karim Leila Nadia Omar Zainab

Pass 5: no swaps, so the list is now in alphabetical order. A1

(b) 1 Bilal 2 Farah 3 Hamid 4 Hana 5 Karim 6 Leila 7 Nadia 8 Omar 9 Zainab

Middle = (1 + 9) ÷ 2 = 5: Karim. Hana is before Karim, so reject 5 to 9. M1

List 1 to 4: (1 + 4) ÷ 2 = 2.5, round up to 3: Hamid. Hana is after Hamid.

Reject 1 to 3, leaving 4: Hana. The name is found A1 A1

(c) 9 names, then 4, then 2, then 1: 4 iterations B1

(Total for Question 1 is 8 marks)

DO NOT WRITE IN THIS AREA

2. Ten pieces of cable, A to J, are to be cut from reels. Each reel holds 30 m of cable. The lengths of the pieces, in metres, are shown below.

Piece	A	B	C	D	E	F	G	H	I	J
Length (m)	7	13	16	14	17	8	11	10	4	18

(a) Calculate a lower bound for the number of reels needed. You must make your method clear.

(2)

(b) Use the first-fit bin packing algorithm, in the order given, to allocate the pieces to reels.

(3)

(c) Use the first-fit decreasing bin packing algorithm to allocate the pieces to reels. Explain why your answer is optimal.

(3)

(a) $7 + 13 + 16 + 14 + 17 + 8 + 11 + 10 + 4 + 18 = 118$

$118 \div 30 = 3.93...$, so a lower bound is $\boxed{4 \text{ reels}}$ M1 A1

(b) Reel 1: A (7), B (13), F (8) Reel 2: C (16), D (14) M1 A1

Reel 3: E (17), G (11) Reel 4: H (10), I (4) Reel 5: J (18) A1

(c) In order: 18, 17, 16, 14, 13, 11, 10, 8, 7, 4 M1

Reel 1: J (18), G (11) Reel 2: E (17), B (13) Reel 3: C (16), D (14)

Reel 4: H (10), F (8), A (7), I (4) A1

4 reels, which equals the lower bound, so the packing is $\boxed{\text{optimal}}$ B1

(Total for Question 2 is 8 marks)

DO NOT WRITE IN THIS AREA

★★★★★ Join students already acing their exams.
Book your FREE lesson at www.eclassroom.org.uk

3.

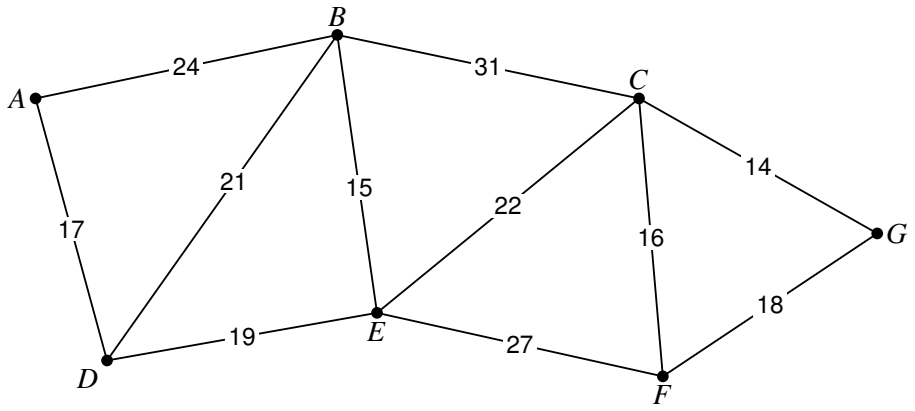

Figure 1

Figure 1 shows seven offices, A to G, and the possible cable routes between them. The number on each arc is the length, in metres, of that route.

(a) Use Kruskal's algorithm to find a minimum spanning tree for the network. List the arcs in the order that you consider them, stating whether each arc is included in the tree or rejected.

(3)

(b) Draw your minimum spanning tree on Diagram 1 in the answer book and state its total length.

(2)

(c) Complete the distance matrix in the answer book, which shows the lengths of the direct routes in Figure 1.

(2)

(d) Use Prim's algorithm on your completed matrix, starting at A, to find the minimum spanning tree. State the order in which you select the arcs.

(2)

(a) CG 14 ✓ BE 15 ✓ CF 16 ✓ AD 17 ✓ M1

FG 18 reject (it would make the cycle CFG) DE 19 ✓ A1

BD 21 reject (cycle BDE) CE 22 ✓ Six arcs, so the tree is complete. A1

DO NOT WRITE IN THIS AREA

Join students already acing their exams.
Book your FREE lesson at www.eclassroom.org.uk

Question 3 continued **D1 ANSWER BOOK**

In the exam this page is printed in the separate D1 answer book. Write your working here, on the copy provided.

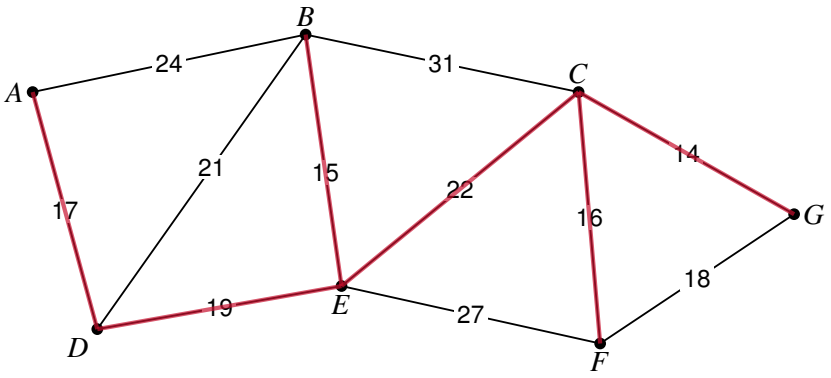

Diagram 1

Total length of the minimum spanning tree: 103 m

	1	4	5	2	3	7	6
	A	B	C	D	E	F	G
A	–	24	–	(17)	–	–	–
B	24	–	31	21	15	–	–
C	–	31	–	–	22	(16)	(14)
D	17	21	–	–	(19)	–	–
E	–	(15)	(22)	19	–	27	–
F	–	–	16	–	27	–	18
G	–	–	14	–	–	18	–

(b) Tree AD, DE, BE, CE, CG, CF drawn on Diagram 1. Length 103 m **B1** **B1**

(c) Row E and column E: B 15, C 22, D 19, F 27, no arc to A or G **B1** **B1**

(d) Number each column as it joins; take the least entry in the numbered rows. **M1**

Order: AD, DE, BE, CE, CG, CF **A1**

(Total for Question 3 is 9 marks)

DO NOT WRITE IN THIS AREA
DO NOT WRITE IN THIS AREA
DO NOT WRITE IN THIS AREA
DO NOT WRITE IN THIS AREA
DO NOT WRITE IN THIS AREA

★★★★★
Join students already acing their exams.
Book your FREE lesson at www.eclassroom.org.uk

4.

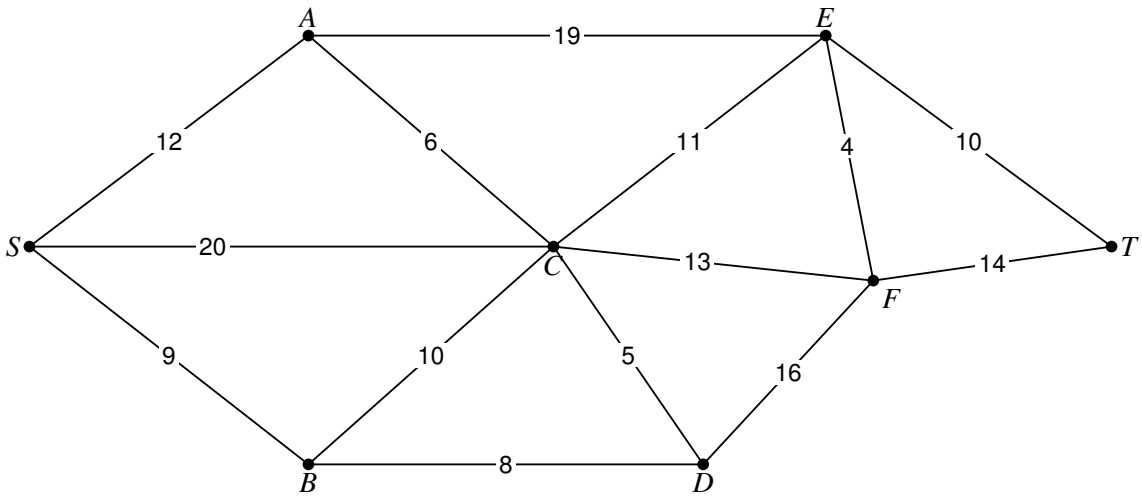

Figure 2

Figure 2 represents roads between eight villages, S, A, B, C, D, E, F and T. The number on each arc is the time, in minutes, to drive along that road.

(a) Use Dijkstra's algorithm on Diagram 2 in the answer book to find the quickest route from S to T. State the route and its time.

(6)

(b) A driver must call at D on the way from S to T. Find the quickest route from S to T that passes through D, and state its time.

(3)

(a) Dijkstra from S, worked on Diagram 2 on the next page.

DO NOT WRITE IN THIS AREA

Question 4 continued D1 ANSWER BOOK

In the exam this page is printed in the separate D1 answer book. Write your working here, on the copy provided.

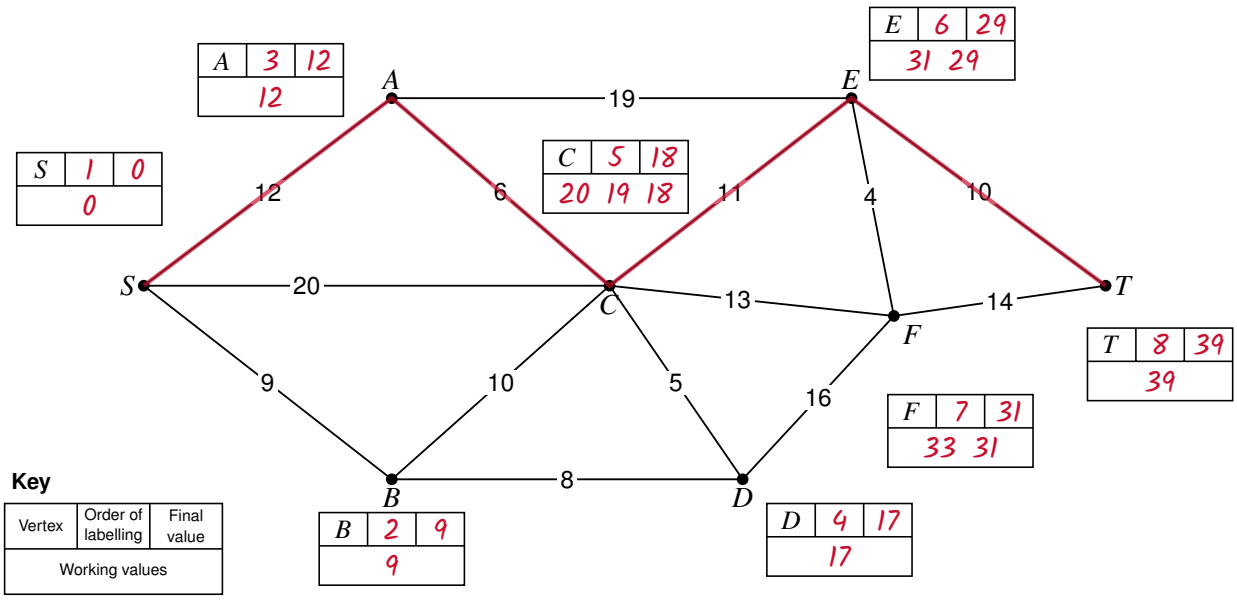

Diagram 2

Quickest route: S A C E T

Time: 39 minutes

(a) Order of labelling, final values and working values on Diagram 2 M1 A1 A1 A1

Trace back from T: 39 = 29 + 10, 29 = 18 + 11, 18 = 12 + 6, 12 = 0 + 12

Route S A C E T time 39 minutes A1 A1

(b) S to D: final value at D is 17, by S B D

D to T: D C E T = S + 11 + 10 = 26 M1

Route S B D C E T time 17 + 26 = 43 minutes A1 A1

(Total for Question 4 is 9 marks)

DO NOT WRITE IN THIS AREA

★★★★★ Join students already acing their exams.
Book your FREE lesson at www.eclassroom.org.uk

5.

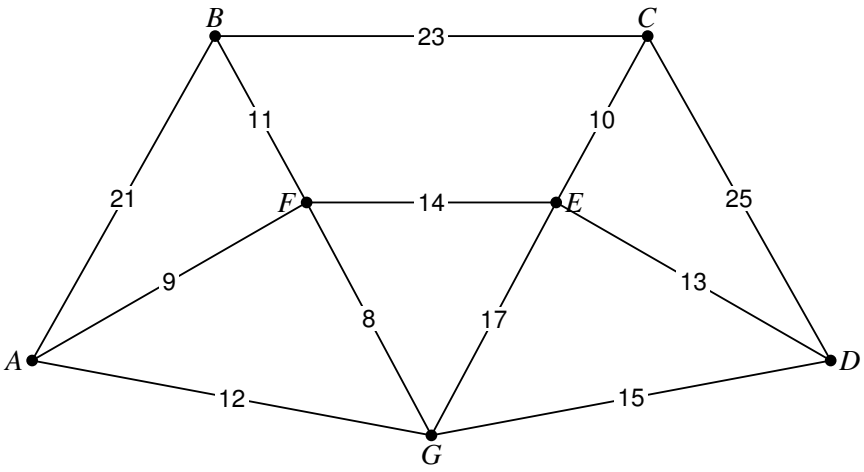

Figure 3

Figure 3 shows the paths in a park. The number on each arc is the length, in metres, of that path. The total length of the paths is 178 m.

A gardener needs to inspect every path at least once, starting and finishing at A.

(a) Explain, with reference to the degrees of the vertices, why the gardener cannot walk along each path exactly once.

(1)

(b) Use the route inspection algorithm to find the length of the shortest inspection route. You must make your method and working clear.

(5)

(c) State the number of times that the shortest route passes through F

(1)

The gardener now decides to start the inspection at B, and to finish at any vertex.

(d) Determine the vertex at which the gardener should finish so that the route is as short as possible, and state the length of this route. Give a reason for your answer.

(3)

(a) A, B, C and D have odd degree (3), so the network is not Eulerian. B1

(b) Odd vertices: A, B, C, D

AB + CD = 20 (AFB) + 23 (CED) = 43 M1 A1

AC + BD = 33 (AFEC) + 34 (BFGD) = 67

AD + BC = 27 (AGD) + 23 (BC) = 50 A1

Least is 43: repeat AF, FB, CE, ED (dashed on Diagram 3) A1

Length = 178 + 43 = 221 m A1

DO NOT WRITE IN THIS AREA
DO NOT WRITE IN THIS AREA
DO NOT WRITE IN THIS AREA
DO NOT WRITE IN THIS AREA
DO NOT WRITE IN THIS AREA
DO NOT WRITE IN THIS AREA

★★★★★
Join students already acing their exams.
Book your FREE lesson at www.eclassroom.org.uk

Question 5 continued D1 ANSWER BOOK

In the exam this page is printed in the separate D1 answer book. Write your working here, on the copy provided.

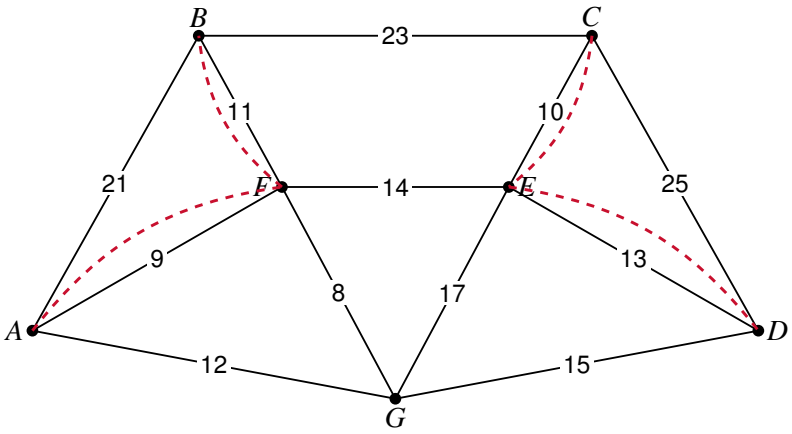

Diagram 3

(c) F: degree 4, plus 2 from the repeats AF and FB, makes 6

So the route passes through F [3 times] B1

(d) Start at B: only the pair without B and the finish is repeated.

Finish A: CD = 23 finish C: AD = 27 finish D: AC = 33 M1

CD is the least, so finish at [A] length 178 + 23 = [201 m] A1 A1

(Total for Question 5 is 10 marks)

DO NOT WRITE IN THIS AREA
DO NOT WRITE IN THIS AREA
DO NOT WRITE IN THIS AREA
DO NOT WRITE IN THIS AREA
DO NOT WRITE IN THIS AREA
DO NOT WRITE IN THIS AREA

★★★★★
Join students already acing their exams.
Book your FREE lesson at www.eclassroom.org.uk

6. A delivery driver must visit six towns, A to F, starting and finishing at the same town. The table shows the shortest distances, in km, between the towns.

	A	B	C	D	E	F
A	–	34	27	41	22	30
B	34	–	19	26	38	29
C	27	19	–	24	31	17
D	41	26	24	–	45	21
E	22	38	31	45	–	28
F	30	29	17	21	28	–

(a) Use the nearest neighbour algorithm, starting at A, to find an upper bound for the length of the route. State your route and its length.

(3)

(b) Use the nearest neighbour algorithm, starting at C, to find a second upper bound. State your route and its length.

(2)

(c) State which of your answers to (a) and (b) is the better upper bound, giving a reason.

(1)

(d) By deleting B and all of its arcs, find a lower bound for the length of the route. You must make your method clear.

(3)

(e) Using your answers, write down the smallest interval that must contain the length of the optimal route.

(1)

(a) A E F C B D A M1 A1

22 + 28 + 17 + 19 + 26 + 41 = 153 km A1

(b) C F D B A E C: 17 + 21 + 26 + 34 + 22 + 31 = 151 km M1 A1

(c) 151 km is better, because it is the lower upper bound. B1

(d) Tree without B: CF 17, DF 21, AE 22, AC 27 = 87 M1 A1

Two least arcs from B: BC 19 + BD 26. 87 + 19 + 26 = 132 km A1

(e) 132 ⩽ optimal length ⩽ 151 B1

(Total for Question 6 is 10 marks)

DO NOT WRITE IN THIS AREA
DO NOT WRITE IN THIS AREA
DO NOT WRITE IN THIS AREA
DO NOT WRITE IN THIS AREA
DO NOT WRITE IN THIS AREA
DO NOT WRITE IN THIS AREA

★★★★★
Join students already acing their exams.
Book your FREE lesson at www.eclassroom.org.uk

7.

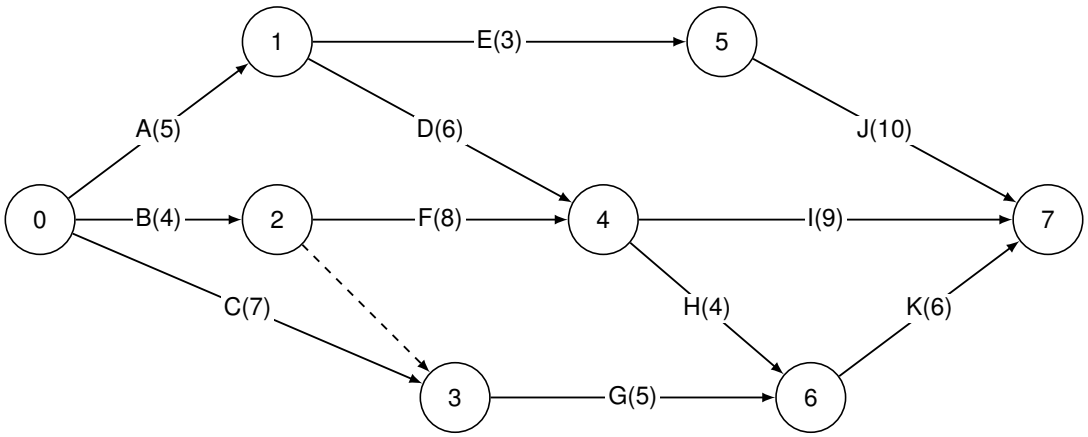

Figure 4

Figure 4 is an activity network for a building project. The activities are represented by the arcs, and the number in brackets on each arc is the duration, in days, of that activity.

(a) Complete Diagram 4 in the answer book to show the early event times and the late event times. Hence show that the minimum completion time of the project is 22 days.

(3)

(b) State the critical activities.

(1)

(c) Calculate the total float on activity D and the total float on activity J. You must make the numbers you use in your calculations clear.

(2)

(d) Calculate a lower bound for the number of workers needed to complete the project in the minimum time. You must show your working.

(2)

(e) On the grid in the answer book, draw a cascade (Gantt) chart for the project.

(3)

(a) Early and late event times on Diagram 4, on the next page. M1 A1

Late time at 4 = least of 16 − 4 and 22 − 9 = 12. Event 7: 22 days. A1

(b) Critical activities: B, F, H, K B1

(c) D: 12 − 5 − 6 = 1 day J: 22 − 8 − 10 = 4 days M1 A1

(d) 5 + 4 + 7 + 6 + 3 + 8 + 5 + 4 + 9 + 10 + 6 = 67 M1

67 ÷ 22 = 3.04..., round up: 4 workers A1

(e) Cascade chart on Diagram 5: critical row first, floats dashed. M1 A1 A1

DO NOT WRITE IN THIS AREA
DO NOT WRITE IN THIS AREA
DO NOT WRITE IN THIS AREA
DO NOT WRITE IN THIS AREA
DO NOT WRITE IN THIS AREA
DO NOT WRITE IN THIS AREA

★★★★★
Join students already acing their exams.
Book your FREE lesson at www.eclassroom.org.uk

Question 7 continued D1 ANSWER BOOK

In the exam this page is printed in the separate D1 answer book. Write your working here, on the copy provided.

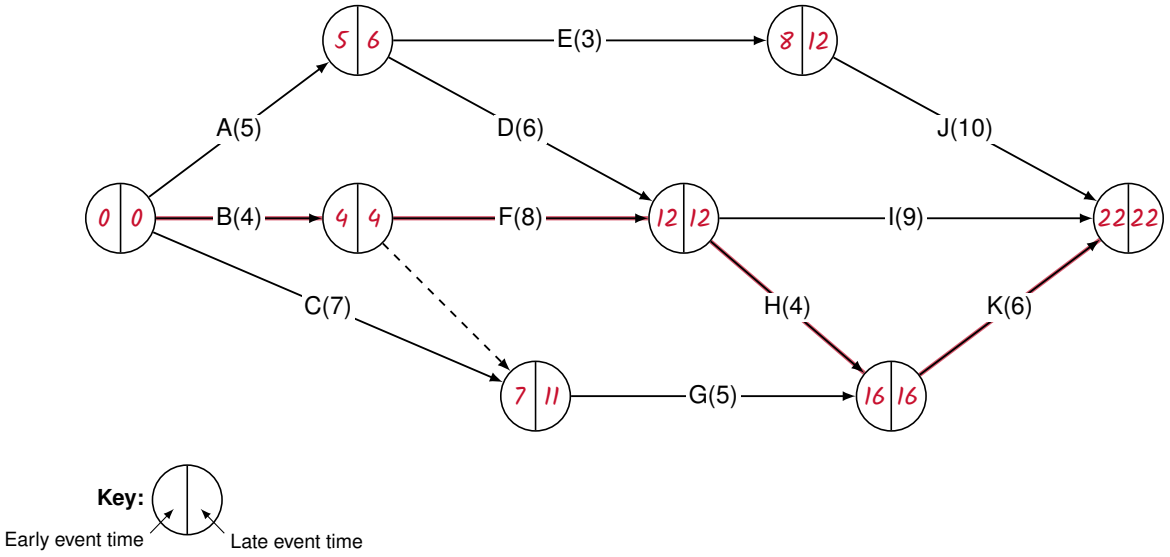

Diagram 4

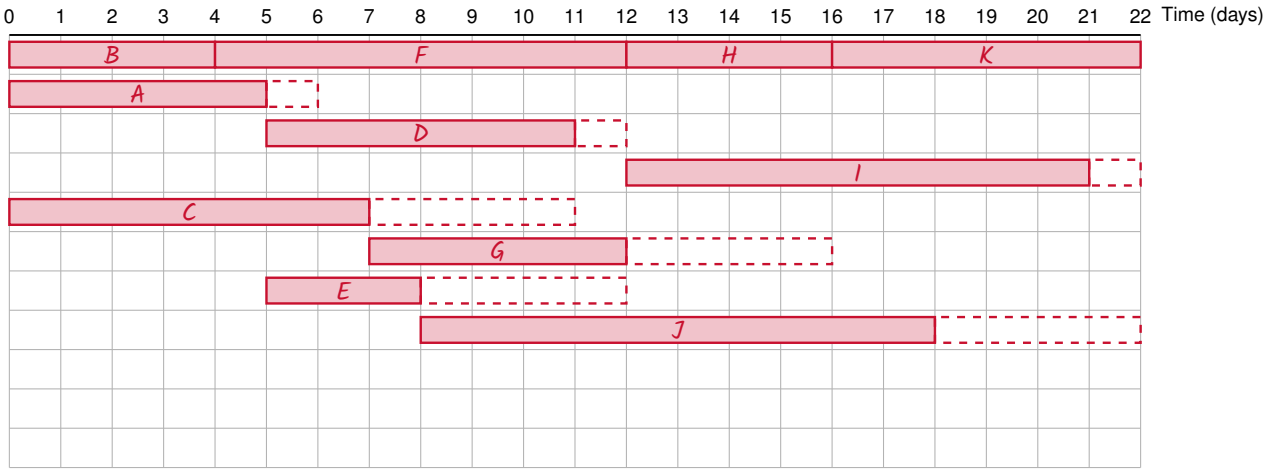

Diagram 5

(Total for Question 7 is 11 marks)

DO NOT WRITE IN THIS AREA
DO NOT WRITE IN THIS AREA
DO NOT WRITE IN THIS AREA
DO NOT WRITE IN THIS AREA
DO NOT WRITE IN THIS AREA
DO NOT WRITE IN THIS AREA

★★★★★
Join students already acing their exams.
Book your FREE lesson at www.eclassroom.org.uk

8. A bakery makes trays of bread and trays of cakes. Let x be the number of trays of bread and y the number of trays of cakes made each day.

Each tray of bread uses 400 g of flour and each tray of cakes uses 500 g of flour. There is 10 kg of flour available each day.

(a) Show that this gives the constraint $4x + 5y \leqslant 100$

(2)

Each tray of bread needs 30 minutes in the oven and each tray of cakes needs 20 minutes. The oven can be used for at most 9 hours each day. The bakery must make at least one tray of cakes for every three trays of bread.

(b) Write down two further inequalities, other than $x \geqslant 0$ and $y \geqslant 0$, to represent these constraints. Simplify your inequalities so that all the coefficients are integers.

(2)

The line $4x + 5y = 100$ is drawn on Diagram 6 in the answer book.

(c) Add lines and shading to Diagram 6 to represent your inequalities from (b). Label the feasible region R.

(3)

The profit is £5 for each tray of bread and £4 for each tray of cakes. The bakery wishes to maximise its profit.

(d) Use the objective line method to find the number of trays of each type the bakery should make, and state the maximum profit.

(3)

(a) Flour, in kg: $0.4x + 0.5y \leqslant 10$ M1

Multiply by 10: $4x + 5y \leqslant 100$, as required A1

(b) Oven, in minutes: $30x + 20y \leqslant 540$, so $3x + 2y \leqslant 54$ B1

Cakes: $y \geqslant x \div 3$, so $x \leqslant 3y$ B1

(c) Both lines and the region R are on Diagram 6. B1 B1 B1

(d) Objective line $5x + 4y = 40$, moved out to the last point of R M1

$4x + 5y = 100$ and $3x + 2y = 54 \Rightarrow x = 10, y = 12$

10 trays of bread, 12 of cakes profit $50 + 48 =$ £98 A1 A1

DO NOT WRITE IN THIS AREA

Question 8 continued D1 ANSWER BOOK

In the exam this page is printed in the separate D1 answer book. Write your working here, on the copy provided.

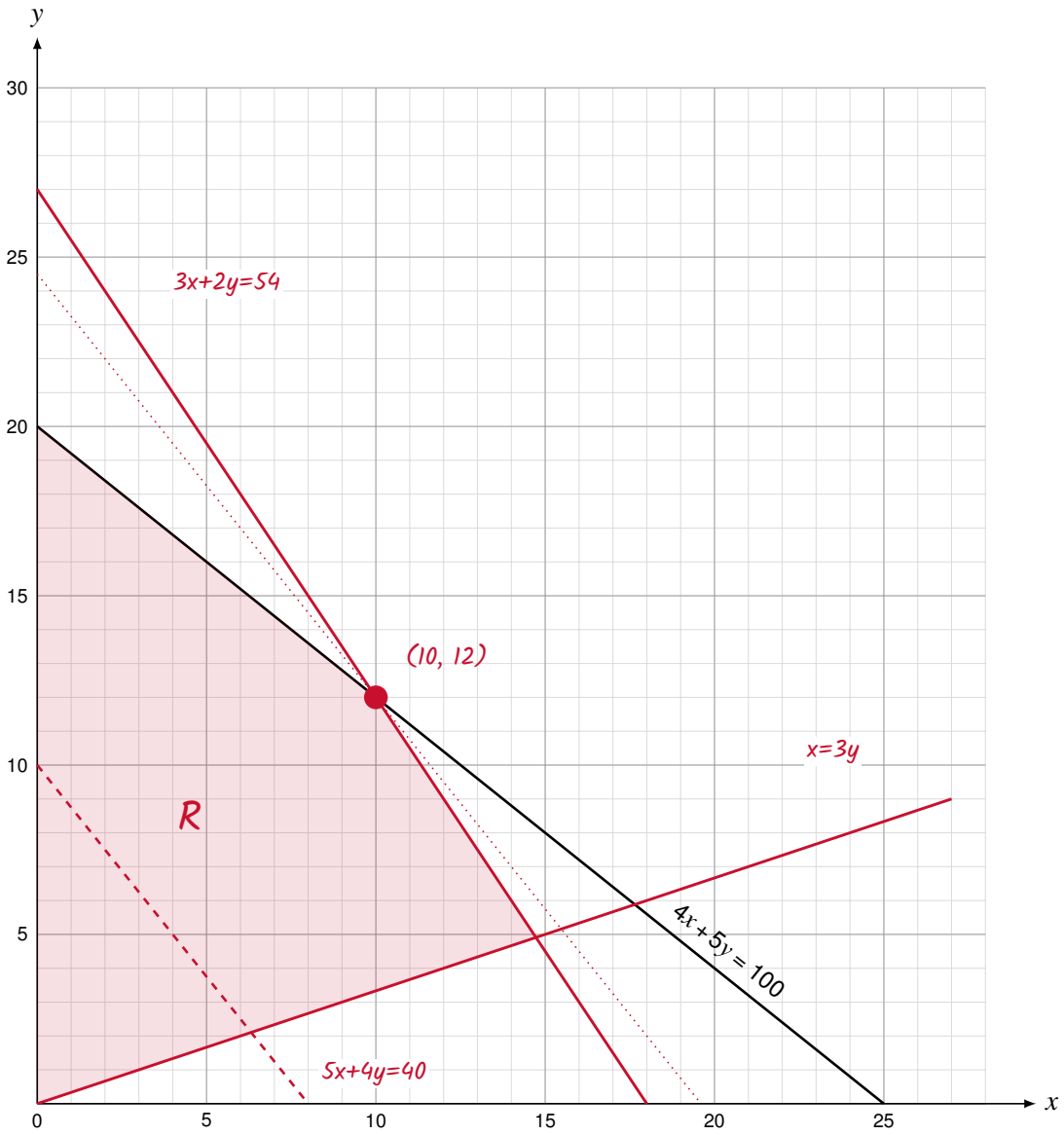

Diagram 6

(Total for Question 8 is 10 marks)

TOTAL FOR PAPER IS 75 MARKS

END

DO NOT WRITE IN THIS AREA
DO NOT WRITE IN THIS AREA
DO NOT WRITE IN THIS AREA
DO NOT WRITE IN THIS AREA
DO NOT WRITE IN THIS AREA

★★★★★
Join students already acing their exams.
Book your FREE lesson at www.eclassroom.org.uk